CODE EXCERPT NOTES

EXERCISE 2

SECTION 302
OCCUPANCY CLASSIFICATION
AND USE DESIGNATION

302.1 Occupancy classification. Occupancy classification is the formal designation of the primary purpose of a building, structure or portion thereof. Structures shall be classified into one or more of the occupancy groups listed in this section based on the nature of the hazards and risks to building occupants generally associated with the intended purpose of the building or structure. An area, room or space that is intended to be occupied at different times for different purposes shall comply with all applicable requirements associated with such potential multipurpose. Structures containing multiple occupancy groups shall comply with Section 508. Where a structure is proposed for a purpose that is not specifically listed in this section, such structure shall be classified in the occupancy it most nearly resembles based on the fire safety and relative hazard. Occupied roofs shall be classified in the group that the occupancy most nearly resembles, according to the fire safety and relative hazard, and shall comply with Section 503.1.4

1. Assembly (see Section 303): Groups A-I, A-2, A-3, A-4 and A-5
2. Business (see Section 304): Group B
3. Educational (see Section 305): Group E

**

6. Institutional (see Section 308): Groups I-I, 1-2, *1-2.1,* 1-3 and 1-4

**

8. Mercantile (see Section 309): Group M

**

12. Storage (see Section 311): Groups S-1 and S-2

**

SECTION 303
ASSEMBLY GROUP A

303.1 Assembly Group A. Assembly Group A occupancy includes, among others, the use of a building or structure, or a portion thereof, for the gathering of persons for purposes such as civic, social or religious functions; recreation, food or drink consumption or awaiting transportation.

**

303.1.1 Small buildings and tenant spaces. A building or tenant space used for assembly purposes with an occupant load of less than 50 persons shall be classified as a Group B occupancy.

303.1.2 Small assembly spaces. The following rooms and spaces shall not be classified as Assembly occupancies:

1. A room or space used for assembly purposes with an occupant load of less than 50 persons and accessory to another occupancy shall be classified as a Group B occupancy or as part of that occupancy.
2. A room or space used for assembly purposes that is less than 750 square feet (70 m^2) in area and accessory to another occupancy shall be classified as a Group B occupancy or as part of that occupancy.

303.1.3 Associated with Group E occupancies. A room or space used for assembly purposes that is associated with a Group E occupancy is not considered a separate occupancy.

**

303.2 Assembly Group A-1.

Group A-1 includes assembly uses, usually with fixed seating, intended for the production and viewing of the performing arts or motion pictures including, but not limited to:

**

Motion picture theaters
Symphony and concert halls
Television and radio studios admitting an audience
Theaters

303.3 Assembly Group A-2.

Group A-2 includes assembly uses intended for food and/or drink consumption including, but not limited to:

Banquet halls
Casinos (gaming areas)
Nightclubs
Restaurants, cafeterias and similar dining facilities (including associated commercial kitchens)
Taverns and bars

303.4 Assembly Group A-3.

Group A-3 occupancy includes assembly uses intended for worship, recreation or amusement and other assembly uses not classified elsewhere in Group A including, but not limited to:

Amusement arcades
Art galleries
Bowling alleys
Community halls
Courtrooms
Dance halls (not including food or drink consumption)
Exhibition halls
Funeral parlors

**

Gymnasiums (without spectator seating)
Lecture halls
Libraries
Museums
Places of religious worship
Pool and billiard parlors

**

303.5 Assembly Group A-4. Assembly uses intended for viewing of indoor sporting events and activities with spectator seating including, but not limited to:
Arenas
Skating rinks
Swimming pools
Tennis courts
303.6 Assembly Group A-5. Assembly uses intended for participation in or viewing outdoor activities including, but not limited to:
Amusement park structures
Bleachers
Grandstands
Stadiums
**

SECTION 304
BUSINESS GROUP B

304.1 Business Group B. Business Group B occupancy includes, among others, the use of a building or structure, or a portion thereof, for office, professional or service-type transactions, including storage of records and accounts. Business occupancies shall include, but not be limited to, the following:
Airport traffic control towers
Ambulatory care facilities *serving six or fewer patients*
**
Animal hospitals, kennels and pounds
Banks
Barber and beauty shops
Car wash
Civic administration
Clinic, outpatient *[SFM] (not classified as Group I-2.1)*
Dry cleaning and laundries: pick-up and delivery stations and self-service
Educational occupancies for students above the 12th grade
Electronic data processing
Food processing establishments and commercial kitchens not associated with restaurants, cafeterias an similar dining facilities not more than 2,500 square feet in area
Laboratories: testing, research *and [SFM] instruction*
Motor vehicle showrooms
Post offices
Print shops
Professional services (architects, attorneys, dentists, physicians, engineers, etc.)
Radio and television stations
Telephone exchanges
Training and skill development not within a school or academic program (this shall include, but not be limited

to, tutoring centers, martial arts studios, gymnastics and similar uses regardless of the ages served, and where not classified as a Group A occupancy).

SECTION 305
EDUCATIONAL GROUP E

305.1 Educational Group E. Educational Group E occupancy includes, among others, the use of a building or structure, or a portion thereof, by more *than six* persons at any one time for educational purposes through the 12th grade.

Exception: [SFM] *A residence used as a home school for the children who normally reside at the residence. Such residences shall remain classified as Group R-2, or Group R-3 occupancies.*

305.1.1 Accessory to places of religious worship. Religious educational rooms and religious auditoriums, which are accessory to places of religious worship in accordance with Section 303.1.4 and have occupant loads of less than 100, shall be classified as Group A-3 occupancies.

305.2 Group E, day care facilities. This group includes buildings and structures or portions thereof occupied by more than *six* children 2 years of age *and older* who receive educational, supervision or personal care services for fewer than 24 hours per day.

Exception: [SFM] *A Day-care facility not otherwise classified as an R-3 occupancy, where occupants are not capable of responding to an emergency situation without physical assistance from the staff shall be classified as Group I-4.*

305.2.1 Within places of religious worship. Rooms and spaces within places of religious worship providing such day care during religious functions shall be classified as part of the primary occupancy where not licensed for daycare purposes by the Department of Social Services.

SECTION 308
INSTITUTIONAL GROUP I

308.1 Institutional Group I. Institutional Group I occupancy includes, among others, the use of a building or structure, or a portion thereof, in which care or supervision is provided to persons who are or are not capable of self-preservation without physical assistance or in which persons are detained for penal or correctional purposes or in which the liberty of the occupants is restricted. Institutional occupancies shall be classified as Group I-1, I-2, I-3 or I-4.

**

Where occupancies house both ambulatory and nonambulatory persons, the more restrictive requirements shall apply.

**

308.2 Institutional Group I-1. *Not used. (See Group R-2.1*

Section 310.1)
308.3 Institutional Group I-2. Institutional Group I-2 occupancy shall include buildings and structures used for medical care on a 24-hour basis for more than five persons who are incapable of self-preservation *or classified as nonambulatory or bedridden.* This group shall include, but not be limited to, the following:.
Detoxification facilities
Hospitals
Nursing homes
Psychiatric hospitals
**
308.3.3 Institutional Group I-2.1 Ambulatory health care facility. *A healthcare facility that receives persons for outpatient medical care that may render the patient incapable of unassisted self-preservation and where each tenant space accommodates more than five such patients.*
**
308.5 Institutional Group I-4, day care facilities.
Institutional group I-4 occupancy shall include buildings and structures occupied by more than *six clients* of any age who receive custodial care for fewer than 24 hours per day by persons other than parents or guardians, relatives by blood, marriage or adoption, and in a place other than the home of the *clients* cared for. This group shall include, but not be limited to, the following:
Adult day care
Child day care
308.5.1 Classification as Group E. A child day care facility that provides care for more than *six* but no more than 100 children *under 2 years of age,* where the rooms in which the children are cared for are located on a level of exit discharge serving such rooms and each of these child care rooms has an exit door directly to the exterior, shall be classified as Group E.
**
SECTION 309
MERCANTILE GROUP M
309.1 Mercantile Group M. Mercantile Group M occupancy includes, among others, the use of a building or structure or a portion thereof, for the display and sale of merchandise and involves stocks of goods, wares or merchandise incidental to such purposes and accessible to the public. Mercantile occupancies shall include, but not be limited to, the following:
Department stores
Drug stores
Markets
**
Motor fuel-dispensing facilities
Retail or wholesale stores
Sales rooms

**

SECTION 310
RESIDENTIAL GROUP R

310.1 Residential Group R. Residential Group R includes, among others, the use of a building or structure, or a portion thereof, for sleeping purposes when not classified as an Institutional Group I or when not regulated by the *California Residential Code*.

**

SECTION 311
STORAGE GROUP S

311.1 Storage Group S. Storage Group S occupancy includes, among others, the use of a building or structure, or a portion thereof, for storage that is not classified as a hazardous occupancy.

311.1.1 Accessory storage spaces. A room or space used for storage purposes that is accessory to another occupancy shall be classified as part of that occupancy.

311.2 Moderate-hazard storage, Group S-1. Storage Group S-1 occupancies are buildings occupied for storage uses that are not classified as Group S-2, including, but not limited to, storage of the following:

Aerosols, Levels 2 and 3
Aircraft hangar (storage and repair)
Bags: cloth, burlap and paper
Bamboos and rattan
Baskets
Belting: canvas and leather
Books and paper in rolls or packs
Boots and shoes
Buttons, including cloth covered, pearl or bone
Cardboard and cardboard boxes
Clothing, woolen wearing apparel
Cordage
Dry boat storage (indoor)
Furniture
Furs
Glues, mucilage, pastes and size
Grains
Horns and combs, other than celluloid
Leather
Linoleum
Lumber
Motor vehicle repair garages complying with the maximum allowable quantities of hazardous materials listed in Table 307.1(1) (see Section 406.8)
Photo engravings
Resilient flooring
Self-service storage facility (mini storage)
Silks
Soaps

Sugar
Tires, bulk storage of
Tobacco, cigars, cigarettes and snuff
Upholstery and mattresses
Wax candles

311.3 Low-hazard storage, Group S-2.
Storage Group S-2 occupancies include, among others, buildings used for the storage of noncombustible materials such as products on wood pallets or in paper cartons with or without single thickness divisions; or in paper wrappings. Such products are permitted to have a negligible amount of plastic trim, such as knobs, handles or film wrapping. Group S-2 storage uses shall include, but not be limited to, storage of the following:
Asbestos
Beverages up to and including 16-percent alcohol in metal, glass or ceramic containers
Cement in bags
Chalk and crayons
Dairy products in nonwaxed coated paper containers
Dry cell batteries
Electrical coils
Electrical motors
Empty cans
Food products
Foods in noncombustible containers
Fresh fruits and vegetables in nonplastic trays or containers
Frozen foods
Glass
Glass bottles, empty or filled with noncombustible liquids
Gypsum board
Inert pigments
Ivory
Meats
Metal cabinets
Metal desks with plastic tops and trim
Metal parts
Metals
Mirrors
Oil-filled and other types of distribution transformers
Parking garages, open or enclosed
Porcelain and pottery
Stoves
Talc and soapstones
Washers and dryers

SECTION 312
UTILITY AND MISCELLANEOUS GROUP U

312.1 General. Buildings and structures of an accessory character and miscellaneous structures not classified in any specific occupancy shall be constructed, equipped and maintained

to conform to the requirements of this code commensurate with the fire and life hazard incidental to their occupancy. Group U shall include, but not be limited to, the following:
Agricultural buildings
Aircraft hangars, accessory to a one- or two-family residence (see Section 412.5)
Barns
Carports
Communication equipment structures with a gross floor area of less than 1,500 square feet
Fences more than 6 feet (1829 mm) in height
Grain silos, accessory to a residential occupancy
Livestock shelters
Private garages
Retaining walls
Sheds
Stables
Tanks
Towers
**

SECTION 508
MIXED USE AND OCCUPANCY

508.1 General. Each portion of a building shall be individually classified in accordance with Section 302.1. Where a building contains more than one occupancy group, the building or portion thereof shall comply with the applicable provisions of Section 508.2, 508.3 or 508.4, or a combination of these sections.
**

508.4 Separated occupancies. Buildings or portions of buildings that comply with the provisions of this section shall be considered as separated occupancies.

508.4.1 Occupancy classification. Separated occupancies shall be individually classified in accordance with Section 302.1. Each separated space shall comply with this code based on the occupancy classification of that portion of the building.
**

508.4.4 Separation. Individual occupancies shall be separated from adjacent occupancies in accordance with Table 508.4.
**

TABLE 508.4
REQUIRED SEPARATION OF OCCUPANCIES (HOURS)[h]

OCCUPANCY	A, E		I-4, *R-2.1*		I-2, *I-2.1*		*I-3*		R-*1, R-2, R-3, R-3.1, R-4*		F-2, S-2[b], U		B[f], F-1[g, h], M, S-1		*L*		H-1		H-2		H-3, H-4		H-5	
	S	NS	S	NS	S	NS	*S*	*NS*	S	NS	S	NS	S	NS	*S*	*NS*	S	NS	S	NS	S	NS	S	NS
A, E	N	N	2	2	2	NP	*2*	*NP*	1	2	N	1	1	2	*2*	*NP*	NP	NP	3	4	2	3	2	NP
I-4, *R-2.1*	—	—	*1*[e]	*NP*	2	NP	*2*	*NP*	1	NP	1	2	1	2	*2*	*NP*	NP	NP	*4*	*NP*	2	NP	2	NP
I-2, *I-2.1*	—	—	—	—	N	*NP*	*2*	*NP*	2	NP	2	NP	2	NP	*2*	*NP*	NP	NP	*4*	*NP*	2	NP	2	NP
I-3	—	—	—	—	—	—	*N*	*NP*	*2*	*NP*	*2*	*2*	*2*	*2*	*2*	*NP*	*NP*	*NP*	*4*	*NP*				
R-*1, R-2, R-3, R-3.1, R-4*	—	—	—	—	—	—	—	—	N	N	1[c]	2[c]	1	2	*4*	*NP*	NP	NP	3	NP	2	NP	2	NP
F-2, S-2[b], U	—	—	—	—	—	—	—	—	—	—	N	N	1	2	*1*	*NP*	NP	NP	3	4	2	3	2	NP
B, F-1, M, S-1	—	—	—	—	—	—	—	—	—	—	—	—	N	N	*1*	*NP*	NP	NP	2	3	1	2	1	NP
L	—	—	—	—	—	—	—	—	—	—					*1*	*NP*	*NP*	*NP*	*2*	*NP*				
H-1	—	—	—	—	—	—	—	—	—	—	—	—	—	—	—	—	N	NP	NP	NP	NP	NP	NP	NP
H-2	—	—	—	—	—	—	—	—	—	—	—	—	—	—	—	—	—	—	N	NP	1	NP	1	NP
H-3, H-4	—	—	—	—	—	—	—	—	—	—	—	—	—	—	—	—	1[d]	NP	1	NP	1[d]	NP	1	NP
H-5	—	—	—	—	—	—	—	—	—	—	—	—	—	—	—	—	—	—	N	NP	—	—	N	NP

S = Buildings equipped throughout with an automatic sprinkler system installed in accordance with Section 903.3.1.1.
NS = Buildings not equipped throughout with an automatic sprinkler system installed in accordance with Section 903.3.1.1.
N = No separation requirement.
NP = Not Permitted.
a. See Section 420.
b. The required separation from areas used only for private or pleasure vehicles shall be reduced by 1 hour but not to less than 1 hour.
c. See Section 406.3.2.
d. Separation is not required between occupancies of the same classification.
e. See Section 422.2 for ambulatory care facilities.
f. Occupancy separations that serve to define fire area limits established in Chapter 9 for requiring fire protection systems shall also comply with Section 707.3.10 and Table 707.3.10 in accordance with Section 901.7.
g. ***[SFM]*** *Group I and F1 occupancies and Group R-2.1 and F-1 occupancies shall have a 3 hour separation.*
h. ***[SFM]*** *Commercial kitchens not associated with cafeterias and similar dining facilities in Group I-2 and Group R-2.1 shall have a 2-hour separation and shall be protected by an automatic sprinkler system.*

**

SECTION 509
INCIDENTAL USES

509.1 General. Incidental uses located within single occupancy or mixed occupancy buildings shall comply with the provisions of this section. Incidental uses are ancillary functions associated with a given occupancy that generally pose a greater level of risk to that occupancy and are limited to those uses listed in Table 509.

**

[F] TABLE 509
INCIDENTAL USES

ROOM OR AREA	SEPARATION AND/OR PROTECTION
Furnace room where any piece of equipment is over 400,000 Btu per hour input	1 hour or provide automatic sprinkler system
Rooms with boilers where the largest piece of equipment is over 15 psi and 10 horsepower	1 hour or provide automatic sprinkler system
Refrigerant machinery room	1 hour or provide automatic sprinkler system
Hydrogen fuel gas rooms, not classified as Group H	1 hour in Group B, F, M, S and U occupancies; 2 hours in Group A, E, I and R occupancies.
Incinerator rooms	2 hours and provide automatic sprinkler system
Paint shops, not classified as Group H, located in occupancies other than Group F	2 hours; or 1 hour and provide automatic sprinkler system
In Group E occupancies, laboratories and vocational shops not classified as Group H	1 hour or provide automatic sprinkler system
[SFM] Rooms or areas with special hazards such as laboratories, vocational shops and other such areas not classified as Group H, located in Group E occupancies where hazardous materials in quantities not exceeding the maximum allowable quantity are used or stored.	*1 hour*
In Group I-2 *and I-2.1* occupancies, laboratories not classified as Group H	1 hour and provide automatic sprinkler system[a]
In ambulatory care facilities, laboratories not classified as Group H	1 hour or provide automatic sprinkler system
Laundry rooms over 100 square feet	1 hour or provide automatic sprinkler system[a]
In Group I-2, laundry rooms over 100 square feet	1 hour
Group I-3 cells and Group I-2 *and I-2.1* patient rooms equipped with padded surfaces	1 hour
In Group I-2, physical plant maintenance shops	1 hour
In ambulatory care facilities or Group I-2 *and I-2.1* occupancies, waste and linen collection rooms with containers that have an aggregate volume of 10 cubic feet or greater	1 hour[a]
In other than ambulatory care facilities and Group I-2 *and I-2.1* occupancies, waste and linen collection rooms over 100 square feet	1 hour or provide automatic sprinkler system
In ambulatory care facilities or Group I-2 *and I-2.1* occupancies, storage rooms greater than 100 square feet	1 hour
Stationary storage battery systems having an energy capacity greater than the threshold quantity specified in Table 1206.2 of the *California Fire Code*	1 hour in Group B, F, M, S and U occupancies; 2 hours in Group A, E, I and R occupancies.[a]
Electrical installations and transformers	See Sections 110.26 through 110.34 and Sections 450.8 through 450.48 of the *California Electrical Code* for protection and separation requirements.

For SI: 1 square foot = 0.0929 m^2, 1 pound per square inch (psi) = 6.9 kPa, 1 British thermal unit (Btu) per hour = 0.293 watts, 1 horsepower = 746 watts, 1 gallon = 3.785 L, 1 cubic foot = 0.0283 m^3.

*a. **[SFM]** Fire barrier protection and automatic sprinkler protection required throughout the fire area in I-2 and I-2.1 occupancies as indicated.*

**

CODE EXCERPT NOTES

SECTION 1004
OCCUPANT LOAD

1004.1 Design occupant load. In determining means of egress requirements, the number of occupants for whom means of egress facilities shall be provided shall be determined in accordance with this section.

1004.2 Cumulative occupant loads. Where the path of egress travel includes intervening rooms, areas or spaces, cumulative occupant loads shall be determined in accordance with this section.

1004.2.1 Intervening spaces or accessory areas. Where occupants egress from one or more rooms, areas or spaces through others, the design occupant load shall be the combined occupant load of interconnected accessory or intervening spaces. Design of egress path capacity shall be based on the cumulative portion of occupant loads of all rooms, areas or spaces to that point along the path of egress travel.

**

1004.3 Multiple function occupant load. Where an area under consideration contains multiple functions having different occupant load factors, the design occupant load for such area shall be based on the floor area of each function calculated independently.

1004.4 Multiple occupancies. Where a building contains two or more occupancies, the means of egress requirements shall apply to each portion of the building based on the occupancy of that space. Where two or more occupancies utilize portions of the same means of egress system, those egress components shall meet the more stringent requirements of all occupancies that are served.

1004.5 Areas without fixed seating. The number of occupants shall be computed at the rate of one occupant per unit of area as prescribed in Table 1004.5. For areas without fixed seating, the occupant load shall not be less than that number determined by dividing the floor area under consideration by the occupant load factor assigned to the function of the space as set forth in Table 1004.5. Where an intended function is not listed in Table 1004.5, the building official shall establish a function based on a listed function that most nearly resembles the intended function.

Exception: Where approved by the building official, the actual number of occupants for whom each occupied space, floor or building is designed, although less than those determined by calculation, shall be permitted to be used in the determination of the design occupant load.

**

CODE EXCERPT NOTES

1004.3 Posting of occupant load. Every room or space that is an assembly occupancy shall have the occupant load of the room or space posted in a conspicuous place, near the main exit or exit access doorway from the room or space, for the intended configurations. Posted signs shall be of an approved legible permanent design and shall be maintained by the owner or authorized agent.
**

TABLE 1004.5
MAXIMUM FLOOR AREA ALLOWANCES PER OCCUPANT

FUNCTION OF SPACE	OCCUPANT LOAD FACTOR[a]
Accessory storage areas, mechanical equipment room	300 gross
Agricultural building	300 gross
Aircraft hangars	500 gross
Airport terminal Baggage claim Baggage handling Concourse Waiting areas	 20 gross 300 gross 100 gross 15 gross
Assembly Gaming floors (keno, slots, etc.) Exhibit gallery and museum	 11 gross 30 net
Assembly with fixed seats	See Section 1004.6
Assembly without fixed seats Concentrated (chairs only—not fixed) Standing space Unconcentrated (tables and chairs)	 7 net 5 net 15 net
Bowling centers, allow 5 persons for each lane including 15 feet of runway, and for additional areas	7 net
Business areas Concentrated business use areas	150 gross See Section 1004.8
Courtrooms—other than fixed seating areas	40 net
Day care	35 net
Dormitories	50 gross
Educational Classroom area Shops and other vocational room areas	 20 net 50 net
Exercise rooms	50 gross
Group H-5 fabrication and manufacturing areas	200 gross
Industrial areas	100 gross
Institutional areas Inpatient treatment areas Outpatient areas Sleeping areas	 240 gross 100 gross 120 gross
Kitchens, commercial	200 gross
Laboratory *Educational (K–12th grade)* *Laboratories, non-educational* *Laboratory suite[b]*	 *50 net* *100 net* *200 gross*
Library Reading rooms Stack area	 50 net 100 gross
Locker rooms	50 gross
Mall buildings—covered and open	See Section 402.8.2
Mercantile Storage, stock, shipping areas	60 gross 300 gross
Parking garages	200 gross
Residential	200 gross
Skating rinks, swimming pools Rink and pool Decks	 50 gross 15 gross
Stages and platforms	15 net
Warehouses	500 gross

For SI: 1 foot = 304.8 mm, 1 square foot = 0.0929 m^2.

a. Floor area in square feet per occupant.

b. See Section 453.2.

CODE EXCERPT NOTES

**

SECTION 202
DEFINITIONS

AREA, BUILDING. The area included within surrounding exterior walls (or exterior walls and fire walls) exclusive of vent shafts and courts. Areas of the building not provided with surrounding walls shall be included in the building area if such areas are included within the horizontal projection of the roof or floor above.

**

CONVERSION TABLE
INCHES TO DECIMAL FEET
(Not part of the code)

Inches	Decimal Feet
1	0.08
2	0.17
3	0.25
4	0.33
5	0.42
6	0.5
7	0.58
8	0.67
9	0.75
10	0.83
11	0.92
12	1.00

**

CODE EXCERPT NOTES

EXERCISE 3

**

SECTION 202
DEFINITIONS

COMMON PATH OF EGRESS TRAVEL. That portion of the exit access travel distance measured from the most remote point of each room, area or space to that point where the occupants have separate and distinct access to two exits or exit access doorways.

**

SECTION 1006
NUMBER OF EXITS AND
EXIT ACCESS DOORWAYS

1006.2.1 Egress based on occupant load and common path of egress travel distance. Two exits or exit access doorways from any space shall be provided where the design occupant load or the common path of egress travel distance exceeds the values listed in Table 1006.2.1. The cumulative occupant load from adjacent rooms, areas or spaces shall be determined in accordance with Section 1004.2

**

1006.2.1.1 Three or more exits or exit access doorways. Three exits or exit access doorways shall be provided from any space with an occupant load of 501 to 1,000. Four exits or exit access doorways shall be provided from any space with an occupant load greater than 1,000.

**

1006.2.2 Egress based on use. The numbers of exits or access to exits shall be provided in the uses described in Sections 1006.2.2.1 through 1006.2.2.7.

**

1006.2.2.4 Group I-4 means of egress. Group I-4 facilities, rooms or spaces where care is provided for more than 10 children that are 2 1/2 years of age or less, shall have access to not less than two exits or exit access doorways.

**

TABLE 1006.2.1
SPACES WITH ONE EXIT OR EXIT ACCESS DOORWAY

OCCUPANCY	MAXIMUM OCCUPANT LOAD OF SPACE	MAXIMUM COMMON PATH OF EGRESS TRAVEL DISTANCE (feet)		
		Without Sprinkler System (feet)		With Sprinkler System (feet)
		Occupant Load		
		OL ≤ 30	OL > 30	
A[c], E, M	49	75	75	75[a]
B	49	100	75	100[a]
F	49	75	75	100[a]
H-1, H-2, H-3	3	NP	NP	25[b]
H-4, H-5	10	NP	NP	75[b]
I-2[d], *I-2.1,* I-4	10	NP	NP	75[a]
I-3	10	NP	NP	100[a]
R-1	10	NP	NP	75[a]
R-2	20	NP	NP	125[a]
R-2.1	*10*	*NP*	*NP*	*75[a]*
R-2.2	*20*	*NP*	*NP*	*125[a]*
R-3[e], *R-3.1[e]*	20	NP	NP	125[a, g]
R-4[e]	20	NP	NP	125[a, g]
S[f]	29	100	75	100[a]
U	49	100	75	75[a]
L	*See Section 453.6.1*		*NP*	*NP*

For SI: 1 foot = 304.8 mm.
NP = Not Permitted.

a. Buildings equipped throughout with an automatic sprinkler system in accordance with Section 903.3.1.1 or 903.3.1.2. See Section 903 for occupancies where automatic sprinkler systems are permitted in accordance with Section 903.3.1.2.
b. Group H occupancies equipped throughout with an automatic sprinkler system in accordance with Section 903.2.5.
c. For a room or space used for assembly purposes having fixed seating, see Section 1029.8.
d. For the travel distance limitations *and number of exit and exit access requirements for rooms and spaces* in Group I-2 *or I-2.1*, see Section 407.4.
e. The common path of egress travel distance shall only apply in a Group R-3 occupancy located in a mixed occupancy building.
f. The length of common path of egress travel distance in a Group S-2 open parking garage shall be not more than 100 feet.
g. For the travel distance limitations in Groups R-3 and R-4 equipped throughout with an automatic sprinkler system in accordance with Section 903.3.1.3, see Section 1006.2.2.6.

**

SECTION 1007
EXIT AND EXIT ACCESS DOORWAY CONFIGURATION

1007.1 General. Exits, exit access doorways, and exit access stairways and ramps serving spaces, including individual building stories, shall be separated in accordance with the provisions of this section.

1007.1.1 Two exits or exit access doorways. Where two exits, exit access doorways, exit access stairways or ramps, or any combination thereof, are required from any portion of the exit access, they shaII be placed a distance apart equal to not less than one-half or the length of the maximum overall diagonal dimension of the building or area to be served measured in a straight line between them. Interlocking or scissor stairways shall he counted as one exit stairway.

Exceptions:

1.Where interior exit stairways or ramps are interconnected by a 1-hour fire-resistance-rated corridor conforming to the requirements of Section 1020, the

required exit separation shall be measured along the shortest direct line of travel within the corridor.

2.Where a building is equipped throughout with an automatic sprinkler system in accordance with Section 903.3. l. l or 903.3.1.2, the separation distance shall be not less than one-third of the length of the maximum overall diagonal dimension of the area served.

1007.1.1.1 Measurement point. The separation distance required in Section 1007. l.l shall be measured in accordance with the following:

l. The separation distance to exit or exit access doorways shall be measured to any point along the width of the doorway.

2.The separation distance to exit access stairways shall be measured to the closest riser.

3.The separation distance to exit access ramps shall be measured to the start of the ramp run.

1007.1.2 Three or more exits or exit access doorways. Where access to three or more exits is required, not less than two exit or exit access doorways shall be arranged in accordance with the provisions of Section 1007.1.1. Additional required exit or exit access doorways shall be arranged a reasonable distance apart so that if one becomes blocked. the others will be available.

**

SECTION 1016
EXIT ACCESS

1016.1 General. The exit access shall comply with the applicable provisions of Sections 1003 through 1015. Exit access arrangement shall comply with Sections 1016 through 1021.

1016.2 Egress through intervening spaces. Egress through intervening spaces shall comply with this section.

**

2. Egress from a room or space shall not pass through adjoining or intervening rooms or areas, except where such adjoining rooms or areas and the area served are accessory to one or the other, are not a Group H occupancy and provide a discernible path of egress travel to an exit.

**

5. Egress shall not pass through kitchens, storage rooms, closets or spaces used for similar purposes.

**

SECTION 1010
DOORS, GATES AND TURNSTILES

In addition to the requirements of this section, means of egress, which provide access to, or egress from, buildings or facilities where accessibility is required for applications listed in Section 1.9.1 regulated by the Division of the State Architect—Access Compliance, shall also comply with Chapter 11A or Chapter 11B, Sections 11B-206.5 and 11B-404, as applicable.

1010.1 Doors. Means of egress doors shall meet the requirements of this section. Doors serving a means of egress system shall meet the requirements of this section and Section 1022.2. Doors provided for egress purposes in numbers greater than required by this code shall meet the requirements of this section.

Means of egress doors shall be readily distinguishable from the adjacent construction and finishes such that the doors are easily recognizable as doors. Mirrors or similar reflecting materials shall not be used on means of egress doors. Means of egress doors shall not be concealed by curtains, drapes, decorations or similar materials.

1010.1.1 Size of doors. The required capacity of each door opening shall be sufficient for the occupant load thereof and shall provide a minimum clear width of 32 inches (813 mm). Clear openings of doorways with swinging doors shall be measured between the face of the door and the stop, with the door open 90 degrees (1.57 rad). Where this section requires a minimum clear width of 32 inches (813 mm) and a door opening includes two door leaves without a mullion, one leaf shall provide a clear opening width of 32 inches (813 mm). In a Group 1-2 or I-2.1 doors serving as means of egress doors where used for the movement of beds and stretcher patients shall provide a clear width not less than 44 inches (1118 mm). The maximum width of a swinging door leaf shall be 48 inches nominal. The minimum clear opening height of door openings shall be not less than 80 inches (2032 mm).

Exceptions:

**

3. Door openings to storage closets less than 10 square feet in area shall not be limited by the minimum width.

**

1010.1.1.1 Projections into clear width. There shall not be projections into the required clear opening width lower than 34 inches (864 mm) above the floor or ground. Projections into the clear opening width between 34 inches (864 mm) and 80 inches (2032 mm) above the

floor or ground shall not exceed 4 inches (102 mm).

Exception: Door closers and door stops shall be permitted to be 78 inches (1980 mm) minimum above the floor.

1010.1.2 Door swing. Egress doors shall be of the pivoted or side-hinged swinging type.

Exceptions:

1. Private garages, office areas, factory and storage arcas with an occupant load of 10 or less.

**

1010.1.2.1 Direction of swing. Pivot or side-hinged swinging doors shall swing in the direction of egress travel where serving a room or area containing an occupant load of 50 or more persons or a Group H occupancy. For Group L occupancies, see Section 453.6.2. In a Group I-2 occupancy, all required exterior egress doors shall open in the direction of egress regardless of the occupant load served.

**

1010.1.9 Door operations. Except as specifically permitted by this section egress doors shall be readily openable from the egress side without the use of a key or special knowledge or effort.

**

CHAPTER 11B
DIVISION 4

***11B*-403.5 Clearances.** Walking surfaces shall provide clearances complying with *Section 11B*-403.5.

Exception: Within employee work areas, clearances on common use circulation paths shall be permitted to be decreased by work area equipment provided that the decrease is essential to the function of the work being performed.

***11B*-403.5.1 Clear width.** Except as provided in *Sections 11B*-403.5.2 and *11B*-403.5.3, the clear width of walking surfaces shall be 36 inches (*914* mm) minimum.

Exceptions:

1. The clear width shall be permitted to be reduced to 32 inches (*813* mm) minimum for a length of 24 inches (610 mm) maximum provided that reduced width segments are separated by segments that are 48 inches (*1219* mm) long minimum and 36 inches (*914* mm) wide minimum.

2. The clear width for walking surfaces in corridors serving an occupant load of 10 or more shall be 44 inches (1118 mm) minimum.

3. The clear width for sidewalks and walks shall be 48 inches (1219 mm) minimum. When, because of right-of-way restrictions, natural barriers or other existing conditions, the enforcing agency determines that compliance with the 48-inch (1219 mm) clear sidewalk width would create an

unreasonable hardship, the clear width may be reduced to 36 inches (914 mm).
4. The clear width for aisles shall be 36 inches (914 mm) minimum if serving elements on only one side, and 44 inches (1118 mm) minimum if serving elements on both sides.
5. The clear width for accessible routes to accessible toilet compartments shall be 44 inches (1118 mm) except for door-opening widths and door swings.

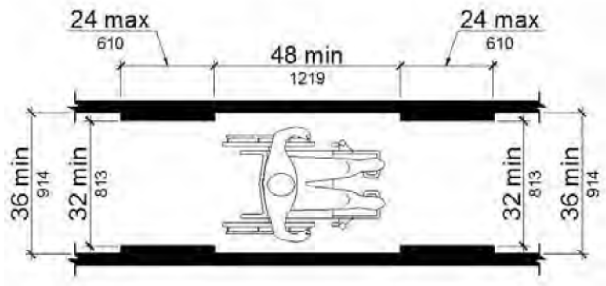

FIGURE *11B*-403.5.1
CLEAR WIDTH OF AN ACCESSIBLE ROUTE

**

EXERCISE 4

**

SECTION 1018
AISLES

1018.1 General. Aisles and aisle accessways serving as a portion of the exit access in the means of egress system shall comply with the requirements of this section. Aisles or aisle accessways shall be provided from all occupied portions of the exit access which contain seats, tables, furnishings, displays and similar fixtures or equipment. The required width of aisles shall be unobstructed.

Exception: Encroachments complying with Section 1005.7.

**

1018.3 Aisles in Groups Band M. In Group Band M occupancies, the minimum clear aisle width shall be determined by Section 1005.1 for the occupant load served, but shall be not less than that required for corridors by Section 1020.2.

**

***11B*-403.5.1 Clear width.** Except as provided in Sections 11B-403.5.2 and 11B-403.5.3, the clear width of walking surfaces shall be 36 inches minimum.

**

Exceptions:

**

4. The clear width for aisles shall be 36 inches (914 mm) minimum if serving elements on only one side, and 44 inches (1118 mm) minimum if serving elements on both sides.

**

SECTION 1005
MEANS OF EGRESS SIZING

1005.1 General. All portions of the means of egress system shall be sized in accordance with this section.

1005.2 Minimum width based on component. The minimum width, in inches (mm), of any means of egress components shall not be less than that specified for such component, elsewhere in this code.

1005.3 Required capacity based on occupant load. The required capacity, in inches (mm), of the means of egress for any room, area, space or story shall not be less than that determined in accordance with Sections 1005.3.1 and 1005.3.2:

1005.3.1 Stairways. The capacity, in inches (mm), of means of egress stairways shall be calculated by multiplying the occupant load served by such stairway by a means of egress capacity factor of 0.3 inch (7.6 mm) per occupant. Where stairways serve more than one story, only the

occupant load of each story considered individually shall be used in calculating the required capacity of the stairways serving that story.
**

1005.3.2 Other egress components. The capacity, in inches, of means of egress components other than stairways shall be calculated by multiplying the occupant load served by such component by a means of egress capacity factor of 0.2 inch per occupant.
**

1005.4 Continuity. The minimum width or required capacity of the means of egress required from any story of a building shall not be reduced along the path of egress travel until arrival at the public way.
**

1005.7 Encroachment. Encroachments into the required means of egress width shall be in accordance with the provisions of this section.

1005.7.1 Doors. Doors, when fully opened, shall not reduce the required width by more than 7 inches. Doors in any position shall not reduce the required width by more than one-half.
**

1005.7.2 Other projections. Handrail projections shall be in accordance with the provisions of Section 1014.8. Other nonstructural projections such as trim and similar decorative features shall be permitted to project into the required width a maximum of 1½ inches on each side.
**

SECTION 1020
CORRIDORS

1020.1 Construction. Corridors shall be fire-resistance rated in accordance with Table 1020.1. The corridor walls required to be fire-resistance rated shall comply with Section 708 for fire partitions.

TABLE 1020.1
CORRIDOR FIRE-RESISTANCE RATING

OCCUPANCY	OCCUPANT LOAD SERVED BY CORRIDOR	REQUIRED FIRE-RESISTANCE RATING (hours)	
		Without sprinkler system	With sprinkler system[c]
H-1, H-2, H-3	All	Not Permitted	1
H-4, H-5, *L*	Greater than 30	Not Permitted	1
A, B, E, F, M, S, U	Greater than 30	1	0
R-*1, R-2, R-3, R-3.1, R-4*	Greater than 10	Not Permitted	*1*
I-2[a], *I-2.1*	*Greater than 6*	Not Permitted	0
I-3, *R-2.1*	*Greater than 6*	Not Permitted	1[b]
I-4	All	1	0
E	*Greater than 10*	*1*	*0*

a. For requirements for occupancies in Group I-2 *and I-2.1,* see Sections 407.2 and 407.3.
b. For a reduction in the fire-resistance rating for occupancies in Group I-3, see Section 408.8.
c. Buildings equipped throughout with an automatic sprinkler system in accordance with Section 903.3.1.1 or 903.3.1.2 where allowed.
d. Group R-3 and R-4 buildings equipped throughout with an automatic sprinkler system in accordance with Section 903.3.1.3. See Section 903.2.8 for occupancies where automatic sprinkler systems are permitted in accordance with Section 903.3.1.3.
*e. **[SFM]** See Section 1029.*

1020.2 Width and capacity. The required capacity of corridors shall be determined as specified in Section 1005.1, but the minimum width shall be not less than that specified in Table 1020.2.
**

TABLE 1020.2
MINIMUM CORRIDOR WIDTH

OCCUPANCY	MINIMUM WIDTH (inches)
Any facility not listed in this table	44
Access to and utilization of mechanical, plumbing or electrical systems or equipment	24
With an occupant load of less than 50	36
Within a dwelling unit	36
In Group E with a corridor having an occupant load of 100 or more	72
In corridors and areas serving stretcher traffic in ambulatory care facilities	72
Group I-2 in areas where required for bed movement	96
Corridors in Group I-2 and I-3 occupancies serving any area caring for one or more nonambulatory persons.	*96*

For SI: 1 inch = 25.4 mm.

1020.4 Dead ends. Where more than one exit or exit access doorway is required, the exit access shall be arranged such that there are no dead ends in corridors more than 20 feet in length.
**

1020.6 Corridor continuity. Fire-resistance-rated corridors shall be continuous from the point of entry to an exit, and shall not be interrupted by intervening rooms. Where the path of egress travel within a fire-resistance-rated corridor to the exit includes travel along unenclosed exit access stairways or ramps, the fire-resistance rating shall be continuous for the length of the stairway or ramp and for the length of the connecting corridor on the adjacent floor leading to the exit.

Exceptions:

1. Foyers, lobbies or reception rooms constructed as required for corridors shall not be construed as intervening rooms.

**

SECTION 1022
EXITS

1022.1 General. Exits shall comply with Sections 1022 through 1027 and the applicable requirements of Sections 1003 through 1015. An exit shall not be used for any purpose that interferes with its function as a means of egress. Once a given level of exit protection is achieved, such level of protection shall not be reduced until arrival at the exit discharge. Exits shall be continuous from the point of entry into the exit to the exit discharge.

1022.2 Exterior exit doors. Buildings or structures used for human occupancy shall have not less than one exterior door that meets the requirements of Section 1010.1.1.
**

1022.2.2 Arrangement. Exterior exit doors shall lead

directly to the exit discharge or the public way.
**

SECTION 1023
INTERIOR EXIT STAIRWAYS AND RAMPS

1023.1 General. Interior exit stairways and interior exit ramps serving as an exit component in a means of egress system shall comply with the requirements of this section. Interior exit stairways and ramps shall lead directly to the exterior of the building or shall be extended to the exterior of the building with an exit passageway conforming to the requirements of Section 1024, except as permitted in Section 1028.1. An interior exit stairway or ramp shall not be used for any purpose other than as a means of egress and a circulation path..

1023.2 Construction. Enclosures for interior exit stairways and ramps shall be constructed as fire barriers in accordance with Section 707 or horizontal assemblies constructed in accordance with Section 711, or both. Interior exit stairway and ramp enclosures shall have a fire-resistance rating of not less than 2 hours where connecting four stories or more and not less than 1 hour where connecting less than four stories. The number of stories connected by the interior exit stairways or ramps shall include any basements, but not any mezzanines. Interior exit stairways and ramp enclosures shall have a fire resistance rating not less than the floor assembly penetrated, but need not exceed 2 hours.
**

CODE EXCERPT NOTES

WALLS AND INTERIOR PARTITIONS, NONCOMBUSTIBLE

GA FILE NO. WP 1350	GENERIC	1 HOUR FIRE	35 to 39 STC SOUND

GYPSUM WALLBOARD, STEEL STUDS

One layer 5/8" type X gypsum wallboard or gypsum veneer base applied parallel or at right angles to each side of 3 5/8" steel studs 24" o.c. with 1" Type S drywall screws 8" o.c. at vertical joints and 12" o.c. at floor and ceiling runners and intermediate studs.

Joints staggered 24" on opposite sides. **(NLB)**

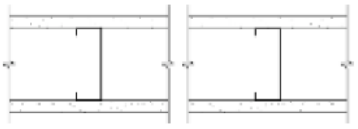

Thickness: 4 7/8"
Approx. Weight: 6 psf
Fire Test: FM WP-45, 6-19-68; OSU T-1770, 8-61; ULC 79T484, 79T500, 79T497, 8-12-81, ULC Design W415
Sound Test: NGC 2005004, 6-15-05 RAL TL06-114, 4-11-06

GA FILE NO. WP 1370	GENERIC	1 HOUR FIRE	35 to 39 STC SOUND

GYPSUM PLASTER, GYPSUM LATH, STEEL STUDS

1/2" 1:2 gypsum-sand plaster applied over 3/8" type X gypsum lath applied at right angles to each side of 2 1/2" steel studs 24" o.c. with two 1" Type S drywall screws at each stud and two butt joint clips per lath at lath ends. **(NLB)**

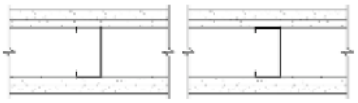

Thickness: 4 1/4"
Approx. Weight: 14 psf
Fire Test: UC, 12-21-65
Sound Test: RAL TL63-268, 6-4-63

GA FILE NO. WP 1380	GENERIC	1 HOUR FIRE	35 to 39 STC SOUND

SOLID GYPSUM PLASTER, METAL LATH, METAL CHANNEL

2" solid 1:1 1/2 gypsum-sand plaster applied over 2.5 lb. metal lath wire tied 6" o.c. to one side of 3/4" cold rolled channel studs 16" o.c. embedded in the plaster. **(NLB)**

Thickness: 2"
Limiting Height: 12'6"
Approx. Weight: 18 psf
Fire Test: OSU T-129, 3-16-48
Sound Test: BMS 144/523, 2-25-55; NBS Monograph 77, 11-30-64

EXERCISE 5

**

***11B*-202 Existing buildings and facilities**

**

***11B*-202.3.1 Prohibited reduction in access.** An alteration that decreases or has the effect of decreasing the accessibility of a building or facility below the requirements for new construction at the time of the alteration is prohibited.

**

SECTION 202
DEFINITIONS

**

ADJUSTED CONSTRUCTION COST. All costs directly related to the construction of a project, including labor, material, equipment, services, utilities, contractor financing, contractor overhead and profit, and construction management costs. The costs shall not be reduced by the value of components, assemblies, building equipment or construction not directly associated with accessibility or usability. The adjusted construction cost shall not include: project management fees and expenses, architectural and engineering fees, testing and inspection fees, and utility connection or service district fees.

**

UNREASONABLE HARDSHIP. *When the enforcing agency finds that compliance with the building standard would make the specific work of the project affected by the building standard infeasible, based on an overall evaluation of the following factors:*
1. The cost of providing access.
2. The cost of all construction contemplated.
3. The impact of proposed improvements on financial feasibility of the project.
4. The nature of the accessibility which would be gained or lost.
5. The nature of the use of the facility under construction and its availability to persons with disabilities.
The details of any finding of unreasonable hardship shall be recorded and entered in the files of the enforcing agency.

**

11B*-202.4 *Path of travel requirements in alterations, additions and structural repairs. *When alterations or additions are made to existing buildings or facilities, an accessible path of travel to the specific area of alteration or addition shall be provided. The primary accessible path of travel shall include:*
1. A primary entrance to the building or facility,
2. Toilet and bathing facilities serving the area,
3. Drinking fountains serving the area,
4. Public telephones serving the area, and

5. Signs.
**
8. When the adjusted construction cost, as defined, is less than or equal to the current valuation threshold, as defined, the cost of compliance with Section 11b-202.4 shall be limited to 20 percent of the adjusted construction cost of alterations, structural repairs or additions. When the cost of full compliance with Section 11b-202.4 would exceed 20 percent, compliance shall be provided to the greatest extent possible without exceeding 20 percent.
When the adjusted construction cost, as defined, exceeds the current valuation threshold, as defined, and the enforcing agency determines the cost of compliance with Section 11 B-202.4 is an unreasonable hardship, as defined, full compliance with Section 11 B-202.4 shall not be required. Compliance shall be provided by equivalent facilitation or to the greatest extent possible without creating an unreasonable hardship; but in no case shall the cost of compliance be less than 20 percent of the adjusted construction cost of alterations, structural repairs or additions. The details of the finding of unreasonable hardship shall be recorded and entered into the files of the enforcing agency and shall be subject to Chapter 1, Section 1.9.1.5, Special Conditions for Persons with Disabilities Requiring Appeals Action Ratification. For the purposes of this exception, the adjusted construction cost of alterations, structural repairs or additions shall not include the cost of alterations to path of travel elements required to comply with Section II B-202.4. In choosing which accessible elements to provide, priority should be given to those elements that will provide the greatest access in the following order:
1. An accessible entrance;
2. All accessible route to the altered area;
3. At least one accessible restroom for each sex or one accessible unisex (single-user or family) restroom;
4. Accessible telephones;
5. Accessible drinking fountains; and
6. When possible, additional accessible elements such as parking, signs, storage and alarms.
If an area has been altered without providing an accessible path of travel to that area, and subsequent alterations of that area or a different orea on the same path of travel are undertaken within three years of the original alteration, the total cost of alterations to the areas on that path of travel during the preceding three-year period shall be considered in determining whether the cost of making that path of travel accessible is disproportionate.

GOGGLE DESCRIPTIONS

MACULAR DEGENERATION
(DOT LENSE)
Degeneration of the central portion of the retina, resulting in a loss of sharp vision.

RETINITIS PIGMENTOSA OR
GLAUCOMA (DONUT LENSE)
Retinitis is the degeneration of the retina manifested by night blindness and gradual loss of peripheral vision, eventually resulting in tunnel vision or total blindness. Glaucoma is an eye disorder in which the optic nerve suffers damage, permanently impacting vision in the affected eye(s) and progressing to complete blindness if untreated. It is often, but not always, associated with increased pressure of the fluid in the eye

CATARACT (FROSTED LENSE)
A clouding that develops in the crystalline lens of the eye or in its envelope, varying in degree from slight to complete opacity and obstructing the passage of light.

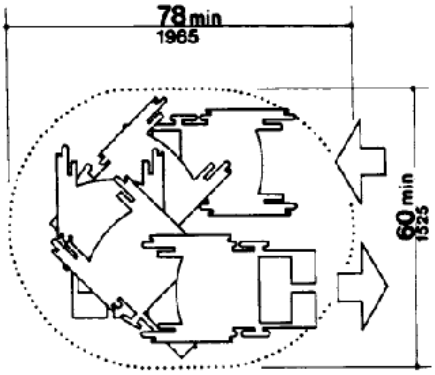

Fig. A2
Space Needed for Smooth U-Turn in a Wheelchair

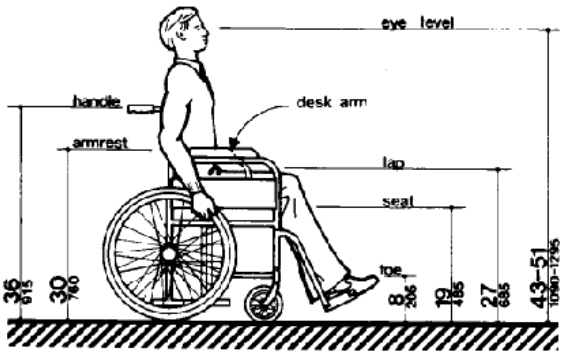

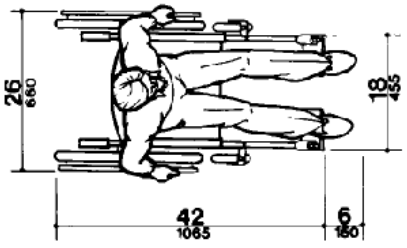

NOTE: Footrests may extend further for tall people

Fig. A3
Dimensions of Adult-Sized Wheelchairs

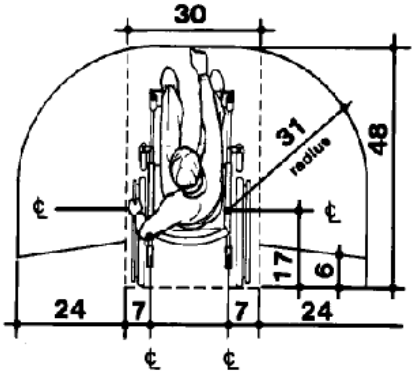

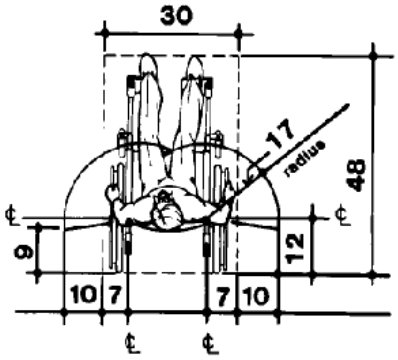

Fig. A3 (a)

A4.3 Accessible Route.

A4.3.1 General.

(1) Travel Distances. Many people with mobility impairments can move at only very slow speeds; for many, traveling 200 ft (61 m) could take about 2 minutes. This assumes a rate of about 1.5 ft/s (455 mm/s) on level ground. It also assumes that the traveler would move continuously. However, on trips over 100 ft (30 m), disabled people are apt to rest frequently, which substantially increases their trip times. Resting periods of 2 minutes for every 100 ft (30 m) can be used to estimate travel times for people with severely limited stamina. In inclement weather, slow progress and resting can greatly increase a disabled person's exposure to the elements.

CODE EXCERPT NOTES

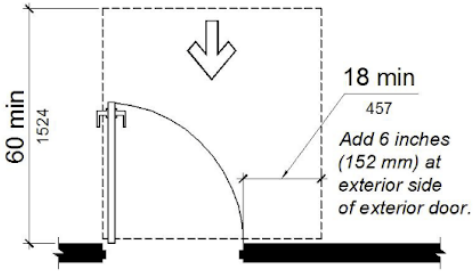

(a)
front approach, pull side

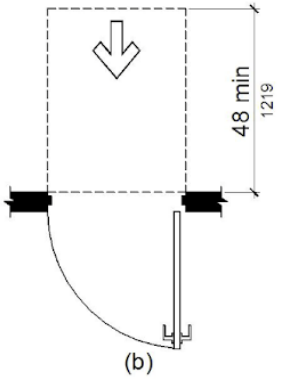

(b)
front approach, push side

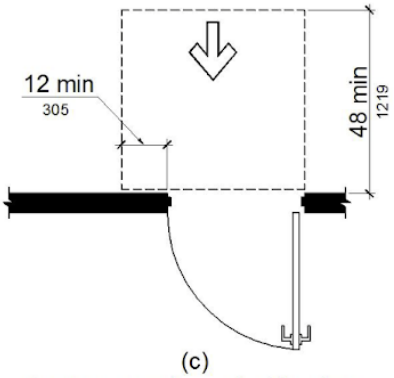

(c)
front approach, push side, door
provided with both closer and latch

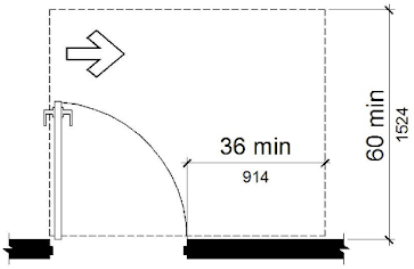

(d)
hinge approach, pull side

Model code
figure not
applicable

(e)
reserved

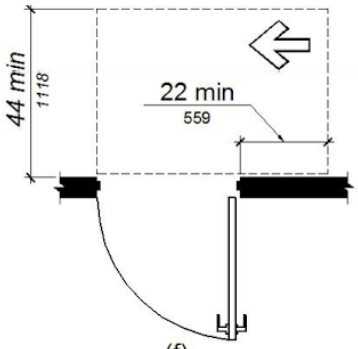

(f)
hinge approach, push side

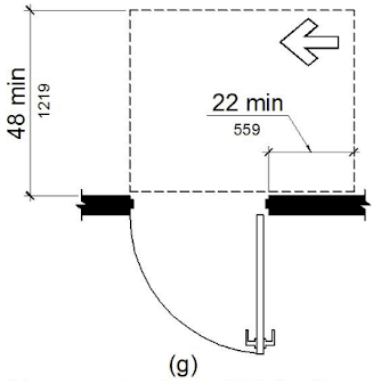

(g)
hinge approach, push side, door
provided with both closer and latch

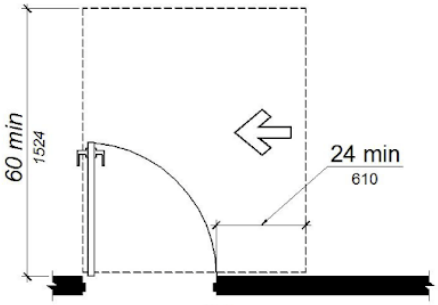

(h)
latch approach, pull side

Model code
figure not
applicable

(i)
reserved

FIGURE *11B*-404.2.4.1
MANEUVERING CLEARANCES AT MANUAL SWINGING DOORS AND GATES

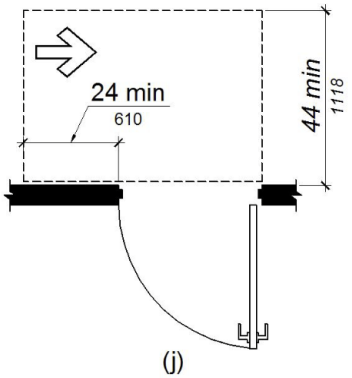

(j)
latch approach, push side

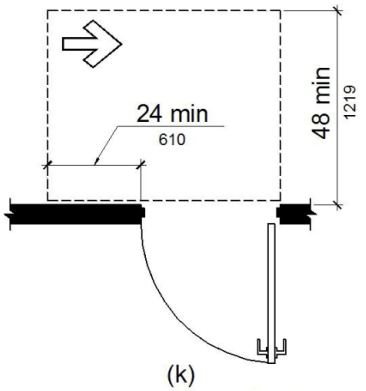

(k)
latch approach, push side, door provided with closer

FIGURE *11B*-404.2.4.1—continued
MANEUVERING CLEARANCES AT MANUAL SWINGING DOORS AND GATES

EXERCISE 6

SECTION 1011
STAIRWAYS

In addition to the requirements of this section, means of egress, which provide access to, or egress from, buildings or facilities where accessibility is required for applications listed in Section 1.9.1 regulated by the Division of the State Architect-Access Compliance, shall also comply with Chapter 11A or Chapter 11B, Sections 11B-210 and 11B-504, as applicable.

**

1011.2 Width and capacity. The required capacity of stairways shall be determined as specified in Section 1005.1, but the minimum width shall be not less than 44 inches (l118 mm). See Section 1009.3 for accessible means of egress stairways.

**

1011.3 Headroom. Stairways shall have a headroom clearance of nol less than 80 inches (2032 mm) measured vertically from a line connecting the edge of the nosings. Such headroom shall be continuous above the stairway to the point where the line intersects the landing below, one tread depth beyond the bottom riser. The minimum clearance shall be maintained the full width of the stairway and landing.

**

1011.5.2 Riser height and tread depth. Stair riser heights shall be 7 inches (118 mm) maximum and 4 inches (102 mm) minimum. The riser height shall be measured vertically between the nosings of adjacent treads. Rectangular tread depths shall be 11 inches (279 mm) minimum measured horizontally between the vertical planes of the foremost projection of adjacent treads and at a right angle to the tread's nosing.

**

1011.5.4 Dimensional uniformity. Stair treads and risers shall be of uniform size and shape. The tolerance between the largest and smallest riser height or between the largest and smallest tread depth shall not exceed ⅜” inch (9.5 mm) in any flight of stairs.

**

1011.6 Stairway landings. There shall be a floor or landing at the top and bottom of each stairway. The width of landings measured perpendicularly to the direction of travel, shall be not not less than the width of stairways served. Every landing shall have a minimum depth measured parallel to the direction of travel equal to the width of the stairway or 48 inches, whichever is less. Doors opening onto a landing shall not reduce the landing to less than one-half the required width. When fully open, the door shall not project more than 7 inches (178 mm) into a landing.

**

1011.8 Vertical rise. A flight of stairs shall not have a vertical rise greater than 12 feet (3658 mm) between floor levels or landings.

**

1011.11 Handrails. Fights of stairways shall have handrails on each side and shall comply with Section 1014. Where glass is used to provide the handrail, the handrail shall comply with Section 2407.

For applications listed in Section 1.9.1 regulated by the Division of the State Architect-Access Compliance, see Chapter 11B, Sections 11b-504.6 and 11b-505.

**

***11B*-504.4 Tread surface.** Stair treads shall comply with *Section 11B*-302. Changes in level are not permitted.

Exception: Treads shall be permitted to have a slope not steeper than 1:48.

11B-504.4.1 Contrasting stripe. *Interior stairs shall have the upper approach and lower tread marked by a stripe providing clear visual contrast. Exterior stairs shall have the upper approach and all treads marked by a stripe providing clear visual contrast.*

The stripe shall be a minimum of 2 inches (51 mm) wide to a maximum of 4 inches (102 mm) wide placed parallel to, and not more than 1 inch (25 mm) from, the nose of the step or upper approach. The stripe shall extend the full width of the step or upper approach and shall be of material that is at least as slip resistant as the other treads of the stair. A painted stripe shall be acceptable. Grooves shall not be used to satisfy this requirement.

**

***11B*-505 Handrails.**

**

llB-505.2 Where required. Handrails shall be provided on both sides of stairs and ramps.

**

llB-505.3 Continuity. Handrails shall be continuous within the full length of each stair flight or ramp run. Inside handrails on switchback or dogleg stairs and ramps shall be continuous between flights or runs.

**

***11B*-505.4 Height.** Top of gripping surfaces of handrails shall be 34 inches (*864* mm) minimum and 38 inches (965 mm) maximum vertically above walking surfaces, stair nosings, and ramp surfaces. Handrails shall be at a consistent height above walking surfaces, stair nosings, and ramp surfaces.

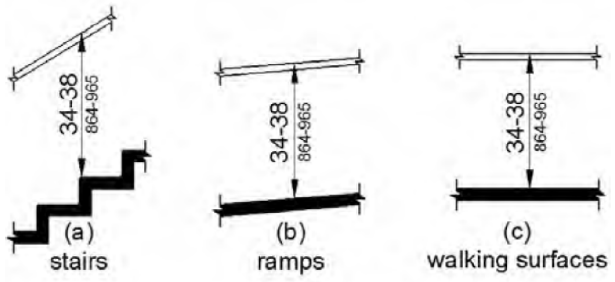

FIGURE *11B*-505.4
HANDRAIL HEIGHT

***11B*-505.5 Clearance.** Clearance between handrail gripping surfaces and adjacent surfaces shall be 1 1/2 inches (38 mm) minimum. *Handrails may be located in a recess if the recess is 3 inches (76 mm) maximum deep and 18 inches (457 mm) minimum clear above the top of the handrail.*

***11B*-505.6 Gripping surface.** Handrail gripping surfaces shall be continuous along their length and shall not be obstructed along their tops or sides. The bottoms of handrail gripping surfaces shall not be obstructed for more than 20 percent of their length. Where provided, horizontal projections shall occur 1 1/2 inches (38 mm) minimum below the bottom of the handrail gripping surface.

**

***11B*-505.7 Cross section.** Handrail gripping surfaces shall have a cross section complying with *Section 11B*-505.7.1 or *11B*-505.7.2.

***11B*-505.7.1 Circular cross section.** Handrail gripping surfaces with a circular cross section shall have an outside diameter of 1 1/4 inches (32 mm) minimum and 2 inches (51 mm) maximum.

FIGURE *11B*-505.5
HANDRAIL CLEARANCE

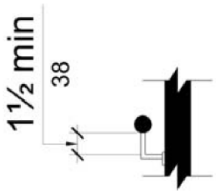

FIGURE *11B*-505.6
HORIZONTAL PROJECTIONS BELOW GRIPPING SURFACE

***11B*-505.8 Surfaces**. Handrail gripping surfaces and any surfaces adjacent to them shall be free of sharp or abrasive elements and shall have rounded edges.

***11B*-505.9 Fittings.** Handrails shall not rotate within their fittings.

***11B*-505.10 Handrail extensions.** Handrail gripping surfaces shall extend beyond and in the same direction of stair flights

and ramp runs in accordance with *Section 11B*-505.10.

Exceptions:

1. Extensions shall not be required for continuous handrails at the inside turn of switchback or dogleg stairs and ramps.

**

3. In alterations, *where the extension of the handrail in the direction of ramp run would create a hazard, the extension of the handrail may be turned 90 degrees from the ramp run.*

***11B*-505.10.1 Top and bottom extension at ramps.** Ramp handrails shall extend horizontally above the landing for 12 inches (305 mm) minimum beyond the top and bottom of ramp runs. Extensions shall return to a wall, guard, or the landing surface, or shall be continuous to the handrail of an adjacent ramp run.

***11B*-505.10.2 Top extension at stairs.** At the top of a stair flight, handrails shall extend horizontally above the landing for 12 inches (305 mm) minimum beginning directly above the first riser nosing. Extensions shall return to a wall, guard, or the landing surface, or shall be continuous to the handrail of an adjacent stair flight.

***11B*-505.10.3 Bottom extension at stairs.** At the bottom of a stair flight, handrails shall extend at the slope of the stair flight for a horizontal distance equal to one tread depth beyond the last riser nosing. *The horizontal extension of a handrail shall be 12 inches (305 mm) long minimum and a height equal to that of the sloping portion of the handrail as measured above the stair nosings.* Extension shall return to a wall, guard, or the landing surface, or shall be continuous to the handrail of an adjacent stair flight.

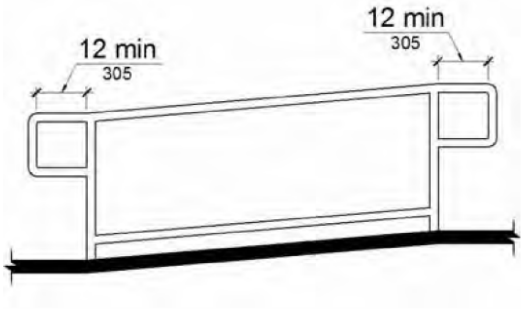

FIGURE *11B*-505.10.1
TOP AND BOTTOM HANDRAIL EXTENSION AT RAMPS

FIGURE *11B*-505.10.2
TOP HANDRAIL EXTENSION AT STAIRS

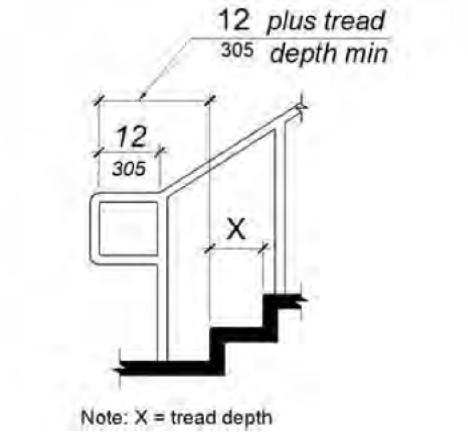

FIGURE *11B*-505.10.3
BOTTOM HANDRAIL EXTENSION AT STAIRS

***11B*-405 Ramps**

**

***11B*-405.2 Slope.** Ramp runs shall have a running slope not steeper than 1:12.

**

***11B*-405.3 Cross slope.** Cross slope of ramp runs shall not be steeper than 1:48.

**

***11B*-405.5 Clear width.** The clear width of a ramp run *shall be 48 inches (1219 mm)* minimum.

Exceptions:

**

2. Handrails may project into the required clear width of the ramp at each side 3 1/2 inches (89 mm) maximum at the handrail height.

**

***11B*-405.6 Rise.** The rise for any ramp run shall be 30 inches (*762* mm) maximum.

***11B*-405.7 Landings.** Ramps shall have landings at the top and the bottom of each ramp run. Landings shall comply with *Section 11B*-405.7.

**

Exception: Slopes not steeper than 1:48 shall be permitted.

***11B*-405.7.2 Width.** The landing clear width shall be at least as wide as the widest ramp run leading to the landing.

***11B-405.7.2.1:** Top landings shall be 60 inches (1524 mm) wide minimum.*

***11B*-405.7.3 Length.** The landing clear length shall be 60 inches (1524 mm) long minimum.

***11B-405.7.3.1:** Bottom landings shall extend 72 inches (1829 mm) minimum in the direction of ramp run.*

**

***11B*-405.8 Handrails.** Ramp runs shall have handrails complying with *Section 11B*-505.

**

***11B*-405.9 Edge protection.** Edge protection complying with *Section 11B*-405.9.2 shall be provided on each side of ramp runs and at each side of ramp landings.

**

***11B*-405.9.2 Curb or barrier.** A curb, or barrier shall be provided that prevents the passage of a 4 inch (*102* mm) diameter sphere, where any portion of the sphere is within 4 inches (*102* mm) of the finish floor or ground surface. *To prevent wheel entrapment, the curb or barrier shall provide a continuous and uninterrupted barrier along the length of the ramp.*

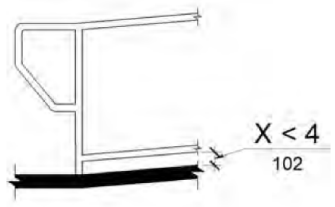

FIGURE *11B*-405.9.2
CURB OR BARRIER EDGE PROTECTION

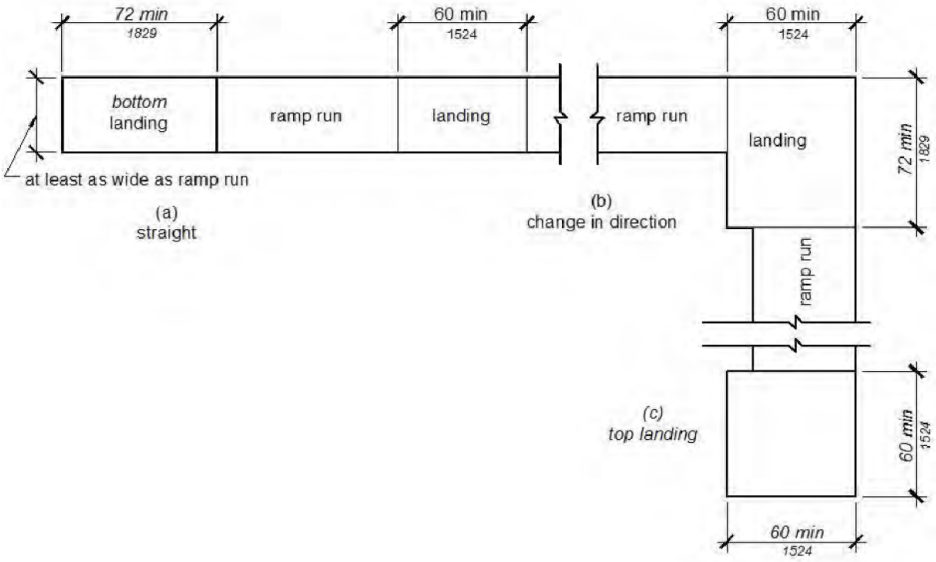

FIGURE *11B*-405.7
RAMP LANDINGS

RAMP SLOPES

1:48	2.0%	1/4" per foot (actually 2.083%)
1:20	5.0%	19/32" per foot (actually 4.95%), or 5/8" per foot (actually 5.2083%)
1:12	8.33%	1" per foot, or 6” of rise per 6’ of run

EXERCISE 7

***11B*-305 Clear floor or ground space**
**

***11B*-305.3 Size.** The clear floor or ground space shall be 30 inches (*762* mm) minimum by 48 inches (*1219* mm) minimum.
**

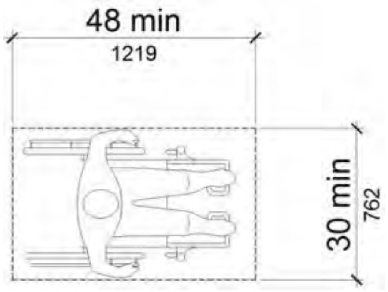

**FIGURE *11B*-305.3
CLEAR FLOOR OR GROUND SPACE**

**

***11B*-404.2.3 Clear width.** Door openings shall provide a clear width of 32 inches (*813* mm) minimum. Clear openings of doorways with swinging doors shall be measured between the face of the door and the stop, with the door open 90 degrees. Openings more than 24 inches (610 mm) deep shall provide a clear opening of 36 inches (*914* mm) minimum. There shall be no projections into the required clear opening width lower than 34 inches (*864* mm) above the finish floor or ground. Projections into the clear opening width between 34 inches (*864* mm) and 80 inches (*2032* mm) above the finish floor or ground shall not exceed 4 inches (*102* mm).
**

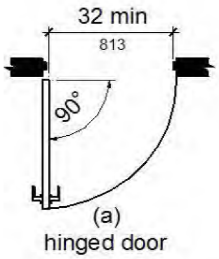

**

***11B*-404.2.4.1 Swinging doors and gates.** Swinging doors and gates shall have maneuvering clearances complying with Table *11B*-404.2.4.1.
**

CODE EXCERPT NOTES

TABLE *11B*-404.2.4.1
MANEUVERING CLEARANCES AT MANUAL SWINGING DOORS AND GATES

TYPE OF USE		MINIMUM MANEUVERING CLEARANCE	
Approach direction	Door or gate side	Perpendicular to doorway	Parallel to doorway (beyond latch side unless noted)
From front	Pull	60 inches (*1524* mm)	18 inches (*457* mm)[5]
From front	Push	48 inches (*1219* mm)	0 inches (0 mm)[1]
From hinge side	Pull	60 inches (*1524* mm)	36 inches (*914* mm)
From hinge side	Push	*44 inches (1118 mm)*[2]	22 inches (*559* mm)[3]
From latch side	Pull	*60 inches (1524 mm)*	24 inches (610 mm)
From latch side	Push	*44 inches (1118 mm)*[4]	24 inches (610 mm)

1. Add 12 inches (305 mm) if closer and latch are provided.
2. Add *4 inches (102 mm)* if closer and latch are provided.
3. Beyond hinge side.
4. Add *4 inches (102 mm)* if closer is provided.
5. *Add 6 inches (152 mm) at exterior side of exterior doors.*

****See Figure 11B-404.2.4.1, and Figure 11B-404.2.4.1 in exercise 5 as required**

***11B*-304 Turning space**
**

***11B*-304.3.1 Circular space.** The turning space shall be a space of 60 inches (*1524* mm) diameter minimum. The space shall be permitted to include knee and toe clearance complying with *Section 11B*-306.
**

***11B*-606 Lavatories and sinks**
**

11B-606.6 Adjacent side wall or partition. *Lavatories, when located adjacent to a side wall or partition, shall be a minimum of 18 inches (457 mm) to the centerline of the fixture.*
**

***11B*-604 Water closets and toilet compartments**
**

***11B*-604.2 Location.** The water closet shall be positioned with a wall or partition to the rear and to one side. The centerline of the water closet shall be *17 inches (432 mm)* minimum to 18 inches (*457* mm) maximum from the side wall or partition, except that the water closet shall be 17 inches (*432* mm) minimum and 19 inches (*483* mm) maximum from the side wall or partition in the ambulatory accessible toilet compartment specified in *Section 11B*-604.8.2. Water closets shall be arranged for a left-hand or right-hand approach.

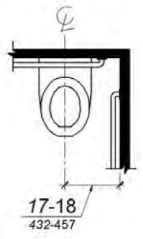

(a)
wheelchair
accessible
water closets

**

***11B*-604.3.1 Size.** Clearance around a water closet shall be 60 inches (*1524* mm) minimum measured perpendicular from the side wall and 56 inches (*1422* mm) minimum measured perpendicular from the rear wall. *A minimum 60 inches (1524 mm) wide and 48 inches (1219 mm) deep maneuvering space shall be provided in front of the water closet.*

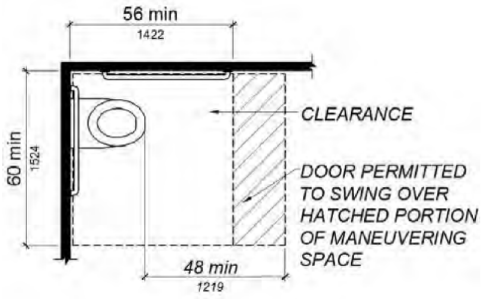

FIGURE *11B*-604.3.1
SIZE OF CLEARANCE AT WATER CLOSETS

**

***11B*-604.8.1.1 Size.** Wheelchair accessible compartments shall be 60 inches (*1524* mm) wide minimum measured perpendicular to the side wall, and 56 inches (*1422* mm) deep minimum for wall hung water closets and 59 inches (*1499* mm) deep minimum for floor mounted water closets measured perpendicular to the rear wall. Wheelchair accessible compartments for children's use shall be 60 inches (*1524* mm) wide minimum measured perpendicular to the side wall, and 59 inches (*1499* mm) deep minimum for wall hung and floor mounted water closets measured perpendicular to the rear wall.

11B-604.8.1.1.1 Maneuvering space with in-swinging door. *In a wheelchair accessible compartment with an in-swinging door, a minimum 60 inches (1524 mm) wide by 36 inches (914 mm) deep maneuvering space shall be provided in front of the clearance required in Section 11B-604.8.1.1. See Figures*

11B-604.8.1.1.2 (b) and 11B-604.8.1.1.3 (b).

11B-604.8.1.1.2 Maneuvering space with side opening door. *In a wheelchair accessible compartment with a side-opening door, either in-swinging or out-swinging, a minimum 60 inches (1524 mm) wide and 60 inches (1524 mm) deep maneuvering space shall be provided in front of the water closet. See Figure 11B-604.8.1.1.2.*

11B-604.8.1.1.3 Maneuvering space with end opening door. *In a wheelchair accessible compartment with an end-opening door (facing the water closet), either in-swinging or out-swinging, a minimum 60 inches (1524 mm) wide and 48 inches (1219 mm) deep maneuvering space shall be provided in front of the water closet. See Figure 11B-604.8.1.1.3.*

***11B*-604.8.1.2 Doors.** Toilet compartment doors, including door hardware, shall comply with *Section 11B*-404 except that if the approach is *from the push side* of the compartment door, clearance between the door side of the compartment and any obstruction shall be *48 inches (1219 mm)* minimum *measured perpendicular to the compartment door in its closed position*. Doors shall be located in the front partition or in the side wall or partition farthest from the water closet. Where located in the front partition, the door opening shall be 4 inches (*102* mm) maximum from the side wall or partition farthest from the water closet. Where located in the side wall or partition, the door opening shall be 4 inches (*102* mm) maximum from the front partition. The door shall be self-closing. A door pull complying with *Section 11B*-404.2.7 shall be placed on both sides of the door near the latch. *Doors shall not swing into the clear floor space or clearance required for any fixture. Doors may swing into that portion of maneuvering space which does not overlap the clearance required at a water closet.*

Exception: *When located at the side of a toilet compartment, the toilet compartment door opening shall provide a clear width of 34 inches (864 mm) minimum.*

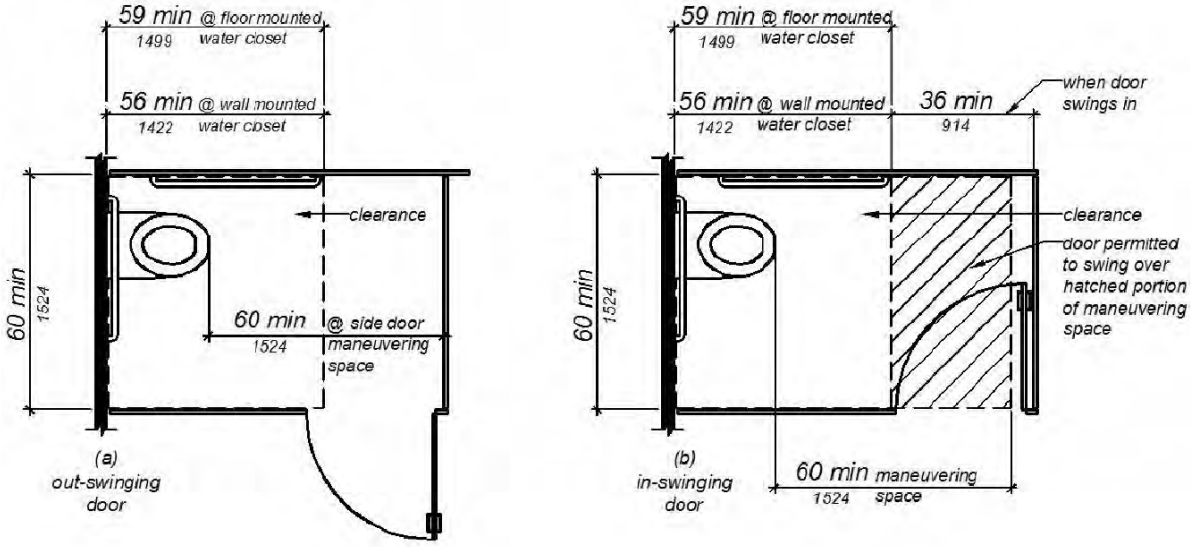

FIGURE 11B-604.8.1.1.2
MANEUVERING SPACE WITH SIDE-OPENING DOOR

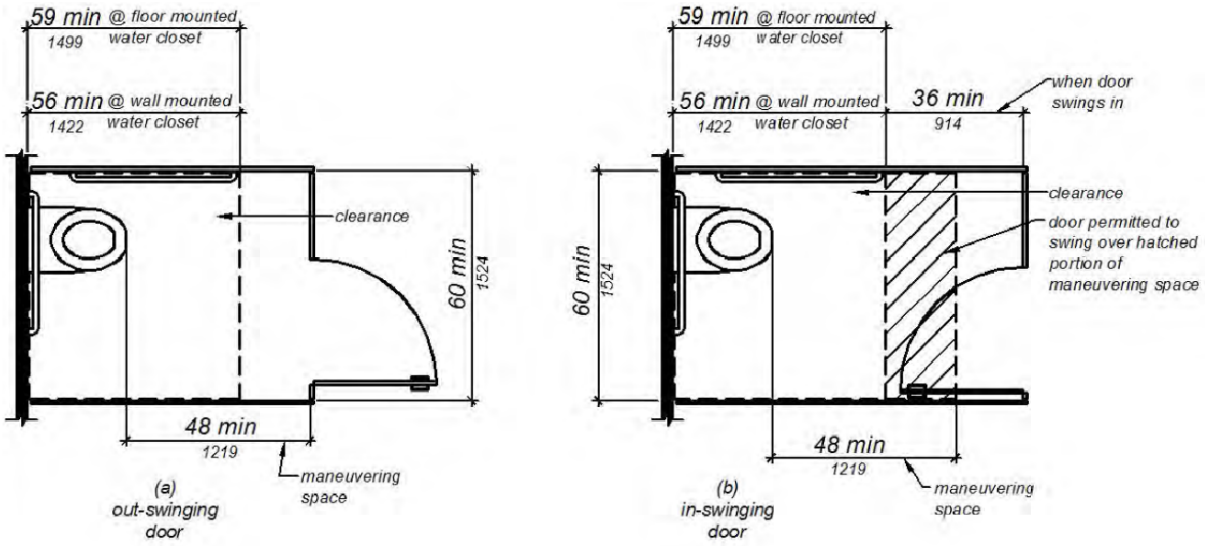

FIGURE 11B-604.8.1.1.3
MANEUVERING SPACE WITH END-OPENING DOOR

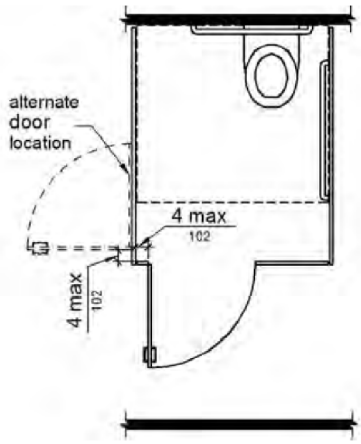

FIGURE *11B*-604.8.1.2
WHEELCHAIR ACCESSIBLE TOILET COMPARTMENT DOORS

**

***11B*-604.8.1.4 Toe clearance.** *At* least one side partition shall provide a toe clearance of 9 inches (*229* mm) minimum above the finish floor and 6 inches (*152* mm) deep minimum beyond the compartment-side face of the partition, exclusive of partition support members. *Partition components at toe clearances shall be smooth without sharp edges or abrasive surfaces.* Compartments for children's use shall provide a toe clearance of 12 inches (305 mm) minimum above the finish floor.

**

***11B*-604.8.1.5 Grab bars.** Grab bars shall comply with *Section 11B*-609. A side-wall grab bar complying with *Section 11B*-604.5.1 shall be provided and shall be located on the wall closest to the water closet. In addition, a rear-wall grab bar complying with *Section 11B*-604.5.2 shall be provided. *Where separate grab bars are required on adjacent walls at a common mounting height, an L-shaped grab bar meeting the dimensional requirements of Sections 11B-604.5.1 and 11B-604.5.2 shall be permitted.*

**

***11B*-305 Clear floor or ground space**

**

***11B*-305.7 Maneuvering clearance.** Where a clear floor or ground space is located in an alcove or otherwise confined on all or part of three sides, additional maneuvering clearance shall be provided in accordance with *Sections 11B*-305.7.1 and *11B*-305.7.2.

***11B*-305.7.1 Forward approach.** Alcoves shall be 36 inches (*914* mm) wide minimum where the depth exceeds 24 inches (610 mm).

***11B*-305.7.2 Parallel approach.** Alcoves shall be 60

inches (*1524* mm) wide minimum where the depth exceeds 15 inches (*381* mm).

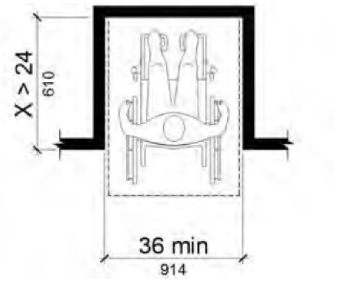

FIGURE *11B*-305.7.1
MANEUVERING CLEARANCE IN AN ALCOVE, FORWARD APPROACH

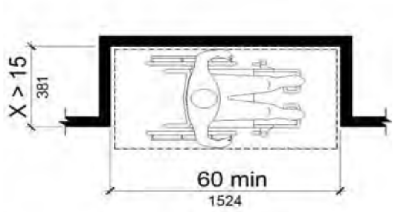

FIGURE *11B*-305.7.2
MANEUVERING CLEARANCE IN AN ALCOVE, PARALLEL APPROACH

EXERCISE 8

SECTION 803
WALL AND CEILING FINISHES

803.1 General. Interior wall and ceiling finish materials shall be classified for fire performance and smoke development in accordance with Section 803.1.1 or 803.1.2, except as shown in Sections 803.2 through 803.13. Materials tested in accordance with Section 803.1.2 shall not be required to be tested in accordance with Section 803.1.1.

803.1.2 Interior wall and ceiling finish materials tested in accordance with ASTM E84 or UL 723.

Interior wall and ceiling finish materials shall be classified in accordance with ASTM E 84 or UL 723. Such interior finish materials shall be grouped in the following classes in accordance with their flame spread and smoke-developed indexes.

Class A: = Flame spread index 0-25; smoke developed index 0-450.

Class B: = Flame spread index 26-75; smoke developed index 0-450.

Class C: = Flame spread index 76-200; smoke developed index 0-450.

Exception: Materials tested in accordance with Section 803.1.2.

**

803.13 Interior finish requirements based on occupancy.

Interior wall and ceiling finish shall have a flame spread index not greater than that specified in Table 803.11 for the group and location designated. Interior wall and ceiling finish materials tested in accordance with NFPA 286 and meeting the acceptance criteria of Section 803.1.1.1, shall be permitted to be used where a Class A classification in accordance with ASTM E84 or UL 723 is required.

**

SECTION 202 DEFINITIONS

**

EXIT PASSAGEWAY. An exit component that is separated from other interior spaces of a building or structure by fire resistance-rated construction and opening protectives, and provides for a protected path of egress travel in a horizontal direction to an exit or to the exit discharge.

**

CORRIDOR. An enclosed exit access component that defines and provides a path of egress travel.

**

EXIT ACCESS. That portion of a means of egress system that leads from any occupied portion of a building or structure to an exit.

TABLE 803.13
INTERIOR WALL AND CEILING FINISH REQUIREMENTS BY OCCUPANCY[k]

GROUP	SPRINKLERED[l]			NONSPRINKLERED		
	Interior exit stairways and ramps and exit passageways[a, b]	Corridors and enclosure for exit access stairways and ramps	Rooms and enclosed spaces[c]	Interior exit stairways and ramps and exit passageways[a, b]	Corridors and enclosure for exit access stairways and ramps	Rooms and enclosed spaces[c]
A-1 & A-2	B	B	C	A	A[d]	B[e]
A-3[f], A-4, A-5	B	B	C	A	A[d]	C
B, E, M, R-1	B	C[m]	C	A	B	C
R-4[n]	B	C	C	A	B	B
F	C	C	C	B	C	C
H, *L*	B	B	C[g]	*NP*	*NP*	*NP*
I-2[n], *I-2.1*	B	B	B[h, i]	A	A	B
I-3	A	A[j]	*B*	*NP*	*NP*	*NP*
I-4	B	B	B[h, i]	A	A	B
R-2	C	C	C	B	B	C
R-2.1	*B*	*C*	*C*	*A*	*B*	*B*
R-2.2	*C*	*C*	*C*	*B*	*B*	*C*
R-3[n], *R-3.1*	C	C	C	C	C	C
S	C	C	C	B	B	C
U	No restrictions			No restrictions		

For SI: 1 inch = 25.4 mm, 1 square foot = 0.0929 m^2.

NP = Not permitted [SFM]

a. Class C interior finish materials shall be permitted for wainscotting or paneling of not more than 1,000 square feet of applied surface area in the grade lobby where applied directly to a noncombustible base or over furring strips applied to a noncombustible base and fireblocked as required by Section 803.15.1.

b. In other than Group I-3 occupancies in buildings less than three stories above grade plane, Class B interior finish for nonsprinklered buildings and Class C interior finish for sprinklered buildings shall be permitted in interior exit stairways and ramps.

c. Requirements for rooms and enclosed spaces shall be based on spaces enclosed by partitions. Where a fire-resistance rating is required for structural elements, the enclosing partitions shall extend from the floor to the ceiling. Partitions that do not comply with this shall be considered to be enclosing spaces and the rooms or spaces on both sides shall be considered to be one room or space. In determining the applicable requirements for rooms and enclosed spaces, the specific occupancy thereof shall be the governing factor regardless of the group classification of the building or structure.

d. Lobby areas in Group A-1, A-2 and A-3 occupancies shall be not less than Class B materials.

e. Class C interior finish materials shall be permitted in places of assembly with an occupant load of 300 persons or less.

f. For places of religious worship, wood used for ornamental purposes, trusses, paneling or chancel furnishing shall be permitted.

g. Class B material is required where the building exceeds two stories.

h. Class C interior finish materials shall be permitted in administrative spaces.

i. Class C interior finish materials shall be permitted in rooms with a capacity of four persons or less.

j. Class B materials shall be permitted as wainscotting extending not more than 48 inches above the finished floor in corridors and exit access stairways and ramps.

k. Finish materials as provided for in other sections of this code.

l. Applies when protected by an automatic sprinkler system installed in accordance with Section 903.3.1.1 or 903.3.1.2.

m. Corridors in ambulatory care facilities shall be provided with Class A or B materials.

n. Where Group R-3 and R-4 occupancies are permitted in Section 903.2.8 to be protected by an automatic sprinkler system installed in accordance with Section 903.3.1.3, the requirements for a non-sprinklered building shall apply.

o. Where patients are restrained in psychiatric treatment areas of Group I-2, finishes shall comply with the requirements of a Group I-3.

CLASS 9

SECTION 906
PORTABLE FIRE EXTINGUISHERS

[F] 906.1 Where required. Portable fire extinguishers shall be installed in the following locations:
1. In Group A, B, E, F, H, I, *L*, M, R-1, R-2, *R-2.1, R.2.2*, R-3.1, R-4 and S occupancies.
**

[F] TABLE 906.3(1)
FIRE EXTINGUISHERS FOR CLASS A FIRE HAZARDS

	LIGHT (Low) HAZARD OCCUPANCY	ORDINARY (Moderate) HAZARD OCCUPANCY	EXTRA (High) HAZARD OCCUPANCY
Minimum rated single extinguisher	2-A[c]	2-A	4-A[a]
Maximum floor area per unit of A	3,000 square feet	1,500 square feet	1,000 square feet
Maximum floor area for extinguisher[b]	11,250 square feet	11,250 square feet	11,250 square feet
Maximum distance of travel to extinguisher	75 feet	75 feet	75 feet

For SI: 1 foot = 304.8 mm, 1 square foot = 0.0929 m^2, 1 gallon = 3.785 L.

a. Two $2^1/_2$-gallon water-type extinguishers shall be deemed the equivalent of one 4-A rated extinguisher.

b. *California Code of Regulations, Title 19, Division 1, Chapter 3* concerning application of the maximum floor area criteria.

c. Two water-type extinguishers each with a 1-A rating shall be deemed the equivalent of one 2-A rated extinguisher for Light (Low) Hazard Occupancies.

POINTS TO REMEMBER REGARDING TABLE 906.3(1)

1.Most buildings represent a class A fire condition, and a light (low) hazard condition
2. A unit of A is fire fighting power, more A's equals more power
3. Row 4 of the table is max travel distance to an extinguisher
4. Row 1 of the table sets the min power in one extinguisher device
5. Row 2 of the table sets max area for one unit of power (not a single extinguisher device necessarily)
6. Row 3 of the table sets max area for a single extinguisher with a large amount of power
7. Extinguisher devices are available from 1-A to 40-A

EXAMPLE FOR TABLE 906.3(1)

20,000 SF BUILDING, LIGHT (Low) HAZARD OCC
1. Must have extinguisher device with 2-A power min (table row 1)
2. Each A (no matter in what extinguisher device) can cover 3,000 SF (table row 2)
3. Row 3 is represents max extinguisher size (row 1 was min Size)
Therefore, 1 extinguisher with 7 A's of power can be specified For the 20,000 SF building, correct? (7*3,000 = 21,000)

INCORRECT, If only one extinguisher was specified, then it would have to cover 20,000 SF which is greater than allowed in row 3 of the table (11,250). The designer would be required to specify two 4-A extinguishers (20,000 / 2 = 10,000 SF)

[F] 906.5 Conspicuous location. Portable fire extinguishers shall be located in conspicuous locations where they will have ready access and be immediately available for use. These locations shall be along normal paths of travel, unless the fire code official determines that the hazard posed indicates the need for placement away from normal paths of travel.
[F] 906.6 Unobstructed and unobscured. Portable fire extinguishers shall not be obstructed or obscured from view. In rooms or areas in which visual obstruction cannot be completely avoided, means shall be provided to indicate the locations of extinguishers.
[F] 906.7 Hangers and brackets. Hand-held portable fire extinguishers, not housed in cabinets, shall be installed on the hangers or brackets supplied. Hangers or brackets shall be securely anchored to the mounting surface in accordance with the manufacturer's installation instructions.
**
[F] 906.9 Extinguisher installation. The installation of portable fire extinguishers shall be in accordance with Sections 906.9.1 through 906.9.3.
[F] 906.9.1 Extinguishers weighing 40 pounds or less. Portable fire extinguishers having a gross weight not exceeding 40 pounds (18 kg) shall be installed so that their tops are not more than 5 feet (1524 mm) above the floor.
[F] 906.9.2 Extinguishers weighing more than 40 pounds. Hand-held portable fire extinguishers having a gross weight exceeding 40 pounds (18 kg) shall be installed so that their tops are not more than 3.5 feet (1067 mm) above the floor.
[F] 906.9.3 Floor clearance. The clearance between the floor and the bottom of installed hand-held portable fire extinguishers shall not be less than 4 inches (102 mm).
**

FIRE SUPPRESSION

FIRE ALARM SYSTEM - OVERVIEW

BASIC SCHEMATIC DIAGRAM OF FIRE ALARM SYSTEM COMPONENTS

SYMBOLS

HORN

STROBE LIGHT

HORN/STROBE COMBINATION

FB FIRE BELL

SP SPEAKER

P MANUAL PULL STATION

S SMOKE DETECTOR

W FIRE SPRINKLER WATER FLOW SWITCH

SYSTEM SCHEMATIC

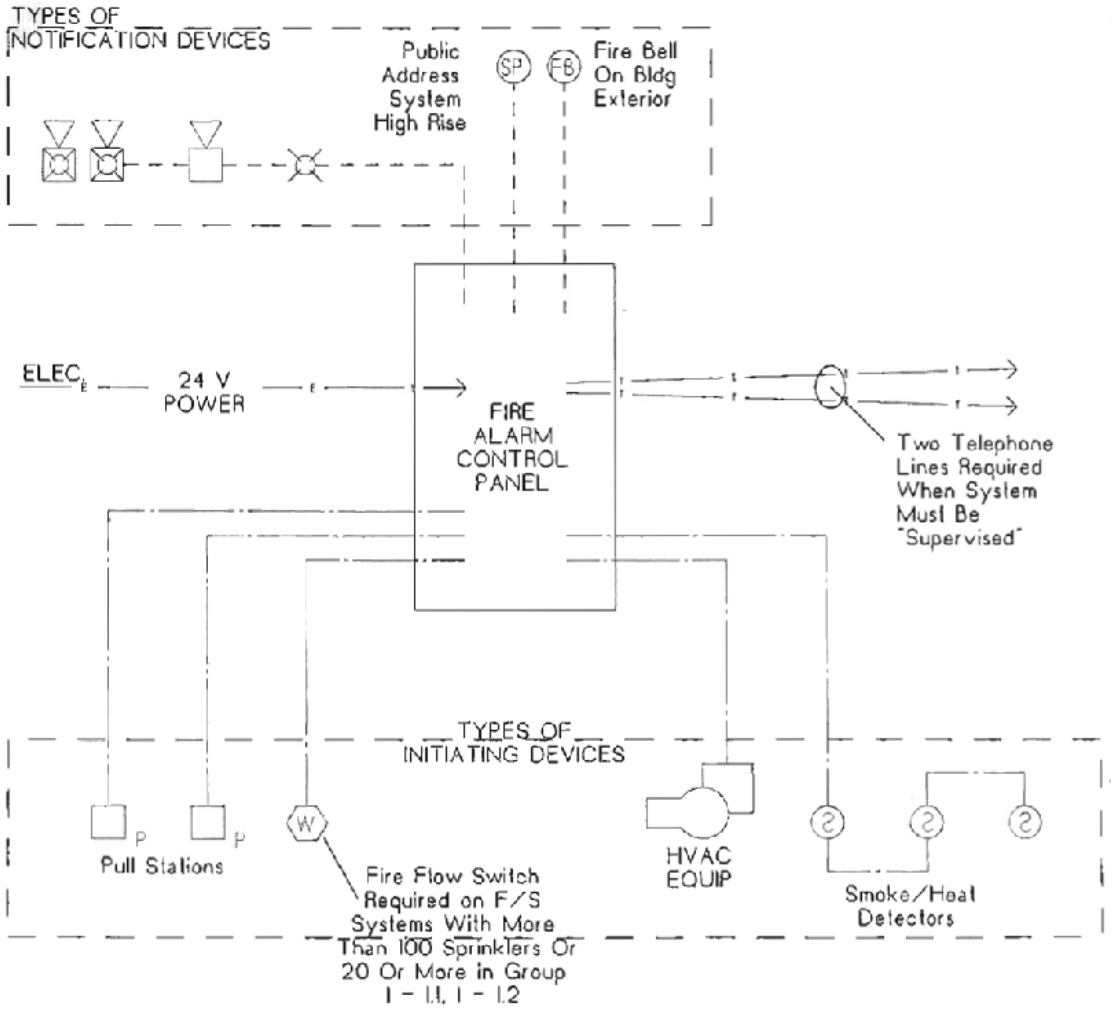

COPYRIGHT 1996 - R.N. FOX, ARCHITECT

TYPICAL SPRINKLER HEAD TYPES

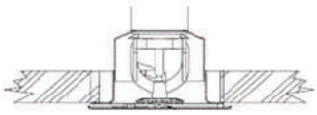

concealed pendent

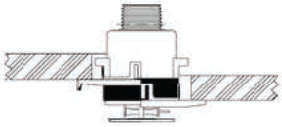
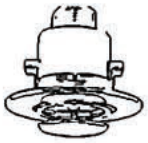

flush pendant

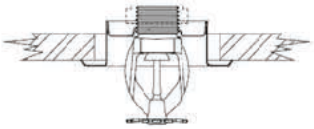

recessed pendant

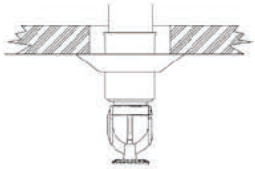

sleeve and skirt pendant

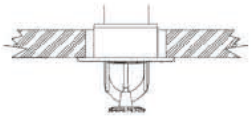

standard pendant

2010 copyright m.s. robins

CODE EXCERPT NOTES

SECTION 905
STANDPIPE SYSTEMS
**

[F] 905.3 Required installations.
**

[F] 905.3.1 Height. *In other than Group R-3 and R-3.1 occupancies*, Class III standpipe systems shall be installed throughout *each floor where any of the following occur*:
1. Buildings where the floor level of the highest story is located more than 30 feet (9144 mm) above the lowest level of fire department vehicle access.
2. Buildings that are four or more stories in height.
3. Buildings where the floor level of the lowest story is located more than 30 feet (9144 mm) below the highest level of fire department vehicle access.
4. Buildings that are two or more stories below the highest level of fire department vehicle access.

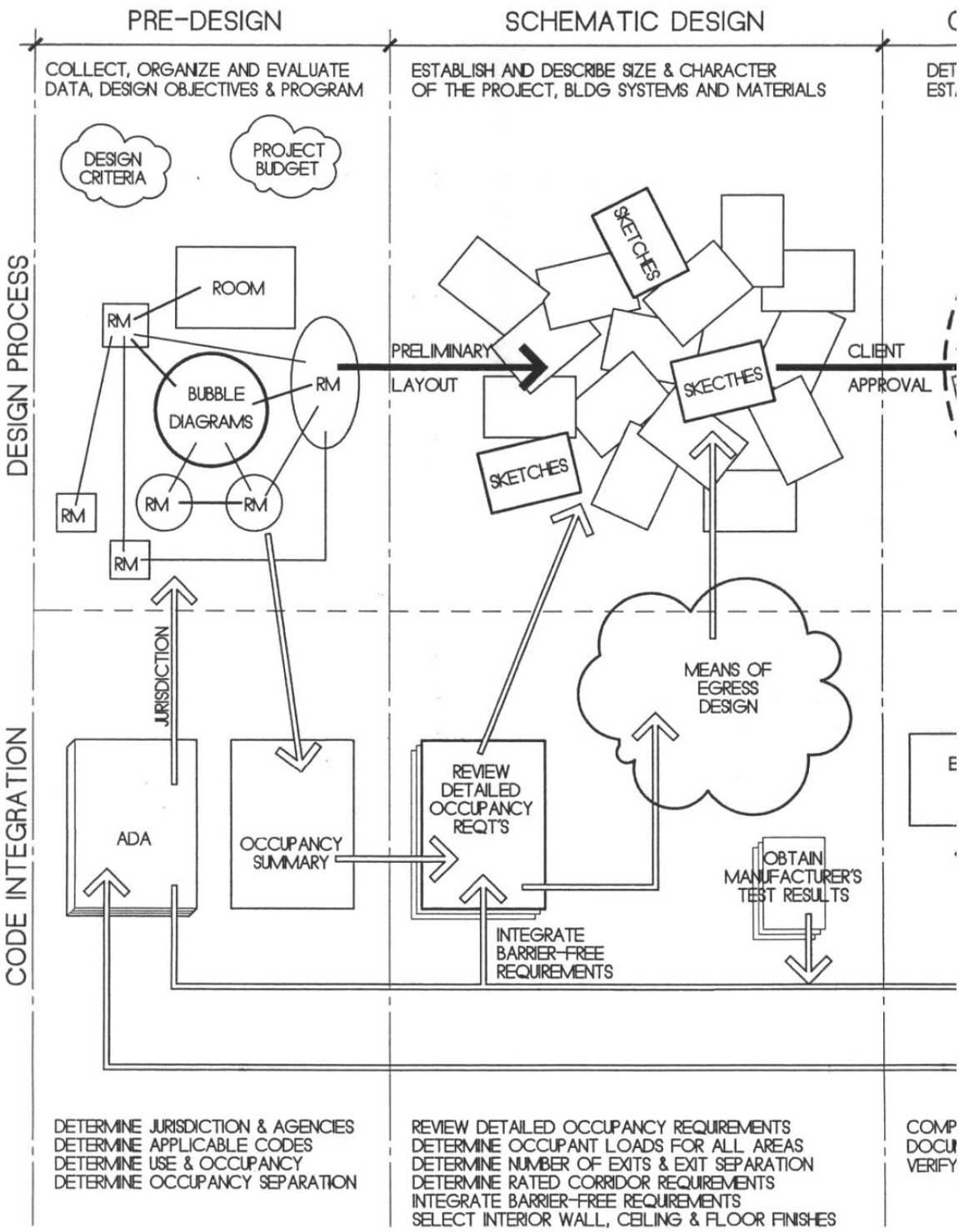
PRE-DESIGN
SCHEMATIC DESIGN
COLLECT, ORGANIZE AND EVALUATE DATA, DESIGN OBJECTIVES & PROGRAM
ESTABLISH AND DESCRIBE SIZE & CHARACTER OF THE PROJECT, BLDG SYSTEMS AND MATERIALS
DESIGN CRITERIA
PROJECT BUDGET
DESIGN PROCESS
ROOM
RM
BUBBLE DIAGRAMS
PRELIMINARY LAYOUT
SKETCHES
CLIENT APPROVAL
JURISDICTION
MEANS OF EGRESS DESIGN
CODE INTEGRATION
ADA
OCCUPANCY SUMMARY
REVIEW DETAILED OCCUPANCY REQT'S
OBTAIN MANUFACTURER'S TEST RESULTS
INTEGRATE BARRIER-FREE REQUIREMENTS
DETERMINE JURISDICTION & AGENCIES
DETERMINE APPLICABLE CODES
DETERMINE USE & OCCUPANCY
DETERMINE OCCUPANCY SEPARATION
REVIEW DETAILED OCCUPANCY REQUIREMENTS
DETERMINE OCCUPANT LOADS FOR ALL AREAS
DETERMINE NUMBER OF EXITS & EXIT SEPARATION
DETERMINE RATED CORRIDOR REQUIREMENTS
INTEGRATE BARRIER-FREE REQUIREMENTS
SELECT INTERIOR WALL, CEILING & FLOOR FINISHES

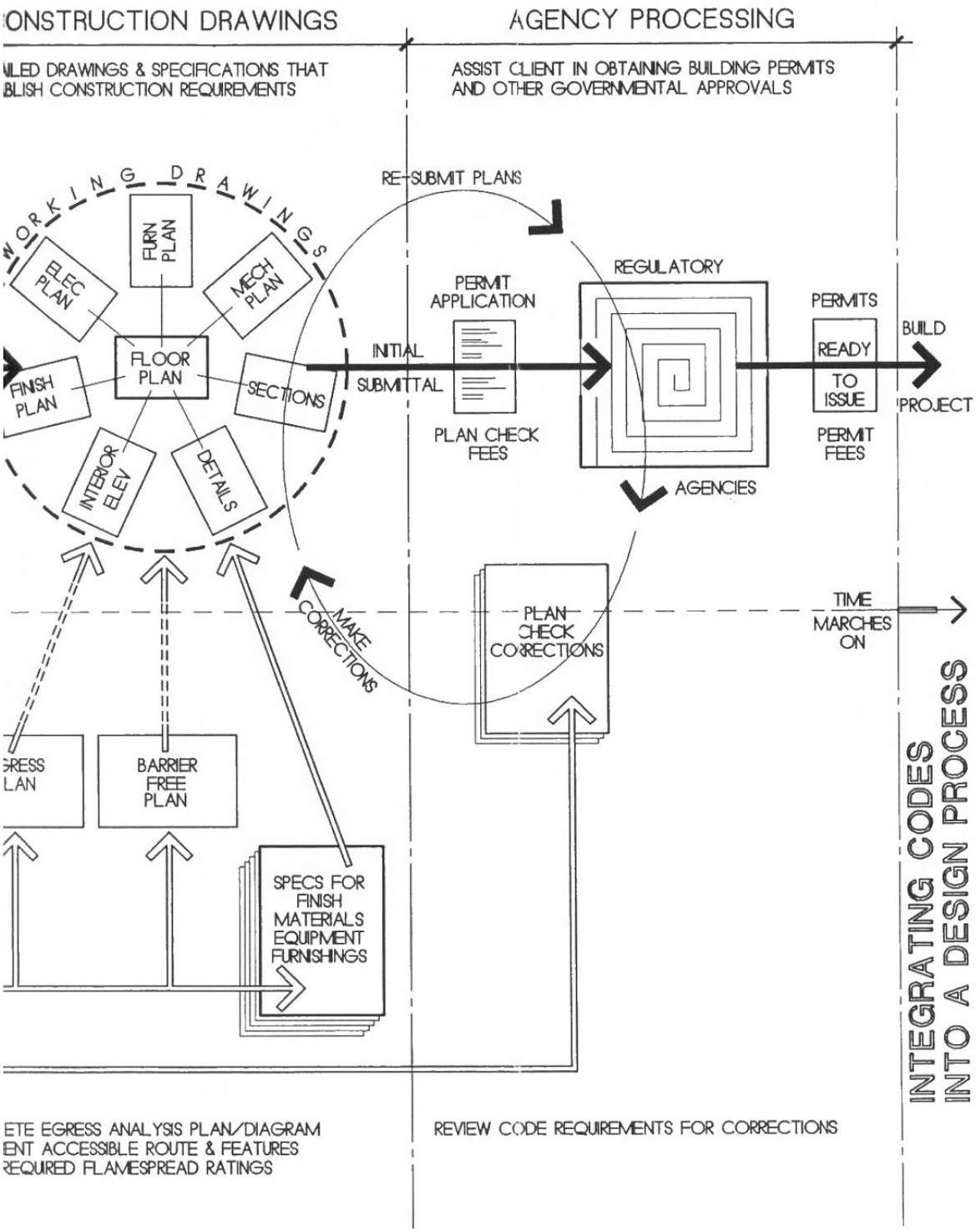
ONSTRUCTION DRAWINGS
AGENCY PROCESSING
ILED DRAWINGS & SPECIFICATIONS THAT
BLISH CONSTRUCTION REQUIREMENTS
ASSIST CLIENT IN OBTAINING BUILDING PERMITS
AND OTHER GOVERNMENTAL APPROVALS
WORKING DRAWINGS
ELEC PLAN
FURN PLAN
MECH PLAN
FINISH PLAN
FLOOR PLAN
SECTIONS
INTERIOR ELEV
DETAILS
RE-SUBMIT PLANS
INITIAL
SUBMITTAL
PERMIT APPLICATION
PLAN CHECK FEES
REGULATORY
AGENCIES
PERMITS
READY TO ISSUE
PERMIT FEES
BUILD
PROJECT
TIME MARCHES ON
MAKE CORRECTIONS
PLAN CHECK CORRECTIONS
GRESS LAN
BARRIER FREE PLAN
SPECS FOR FINISH MATERIALS EQUIPMENT FURNISHINGS
INTEGRATING CODES INTO A DESIGN PROCESS
ETE EGRESS ANALYSIS PLAN/DIAGRAM
ENT ACCESSIBLE ROUTE & FEATURES
REQUIRED FLAMESPREAD RATINGS
REVIEW CODE REQUIREMENTS FOR CORRECTIONS

CLASS 10

**

***11B*-202 Existing buildings and facilities**

**

***11B*-202.3.1 Prohibited reduction in access.** An alteration that decreases or has the effect of decreasing the accessibility of a building or facility below the requirements for new construction at the time of the alteration is prohibited.

**

SECTION 202
DEFINITIONS

**

ADJUSTED CONSTRUCTION COST. All costs directly related to the construction of a project, including labor, material, equipment, services, utilities, contractor financing, contractor overhead and profit, and construction management costs. The costs shall not be reduced by the value of components, assemblies, building equipment or construction not directly associated with accessibility or usability. The adjusted construction cost shall not include: project management fees and expenses, architectural and engineering fees, testing and inspection fees, and utility connection or service district fees.

**

UNREASONABLE HARDSHIP. *When the enforcing agency finds that compliance with the building standard would make the specific work of the project affected by the building standard infeasible, based on an overall evaluation of the following factors:*
1. The cost of providing access.
2. The cost of all construction contemplated.
3. The impact of proposed improvements on financial feasibility of the project.
4. The nature of the accessibility which would be gained or lost.
5. The nature of the use of the facility under construction and its availability to persons with disabilities.
The details of any finding of unreasonable hardship shall be recorded and entered in the files of the enforcing agency.

**

11B*-202.4 *Path of travel requirements in alterations, additions and structural repairs. *When alterations or additions are made to existing buildings or facilities, an accessible path of travel to the specific area of alteration or addition shall be provided. The primary accessible path of travel shall include:*
1. A primary entrance to the building or facility,
2. Toilet and bathing facilities serving the area,
3. Drinking fountains serving the area,

4. Public telephones serving the area, and
5. Signs.
**
8. When the adjusted construction cost, as defined, is less than or equal to the current valuation threshold, as defined, the cost of compliance with Section 11b-202.4 shall be limited to 20 percent of the adjusted construction cost of alterations, structural repairs or additions. When the cost of full compliance with Section 11b-202.4 would exceed 20 percent, compliance shall be provided to the greatest extent possible without exceeding 20 percent.
When the adjusted construction cost, as defined, exceeds the current valuation threshold, as defined, and the enforcing agency determines the cost of compliance with Section 11 B-202.4 is an unreasonable hardship, as defined, full compliance with Section 11 B-202.4 shall not be required. Compliance shall be provided by equivalent facilitation or to the greatest extent possible without creating an unreasonable hardship; but in no case shall the cost of compliance be less than 20 percent of the adjusted construction cost of alterations, structural repairs or additions. The details of the finding of unreasonable hardship shall be recorded and entered into the files of the enforcing agency and shall be subject to Chapter 1, Section 1.9.1.5, Special Conditions for Persons with Disabilities Requiring Appeals Action Ratification.
For the purposes of this exception, the adjusted construction cost of alterations, structural repairs or additions shall not include the cost of alterations to path of travel elements required to comply with Section II B-202.4.
In choosing which accessible elements to provide, priority should be given to those elements that will provide the greatest access in the following order:
1. An accessible entrance;
2. All accessible route to the altered area;
3. At least one accessible restroom for each sex or one accessible unisex (single-user or family) restroom;
4. Accessible telephones;
5. Accessible drinking fountains; and
6. When possible, additional accessible elements such as parking, signs, storage and alarms.
If an area has been altered without providing an accessible path of travel to that area, and subsequent alterations of that area or a different orea on the same path of travel are undertaken within three years of the original alteration, the total cost of alterations to the areas on that path of travel during the preceding three-year period shall

be considered in determining whether the cost of making that path of travel accessible is disproportionate.
**

SECTION 202
DEFINITIONS
**

VALUATION THRESHOLD. [DSA-AC] *An annually adjusted, dollar-amount figure used in part to determine the extent of required path of travel upgrades. The baseline valuation threshold of $50,000 is based on the January 1981, "ENR US20 Cities" Average Construction Cost Index (CCI) of 3372.02 as published in Engineering News Record, McGraw Hill Publishing Company. The current valuation threshold is determined by multiplying the baseline valuation threshold by a ratio of the current year's January CCI to the baseline January 1981 CCI.*

For current valuation threshold go to:
http://www.dgs.ca.gov/dsa/programs/progAccess/threshold.aspx

2019 year, $ 166,157.00 valuation threshold

***11B*-203 General exceptions**
**

***11B*-203.9 Employee work areas.**
**

Spaces and elements within employee workstations shall only be required to comply with *Sections 11B*-207.1, 11B-215.3, 11B-302, 11B-303, 11B0308.1.1, 11B308.1.2, and 11B-404.2.3 unless exempted by other parts of this code. Common use circulation paths within employee workstations shall comply with section 11B-206.2.8.

CITY OF NEWPORT BEACH

COMMUNITY DEVELOPMENT DEPARTMENT
BUILDING DIVISION
100 Civic Center Drive | P.O. Box 1768 | Newport Beach, CA 92658
www.newportbeachca.gov | (949) 644-3200

DOCUMENTATION OF UNREASONABLE HARDSHIP – ($335.00)

❑ ***FINDING OF UNREASONABLE HARDSHIP FOR PROJECTS UNDER $166,157* CBC 11B-202.4 – EXCEPTION: 8 (***FILL OUT PAGE 2***)***

❑ ***FINDING OF TECHNICAL INFEASIBILITY FOR PROJECTS PER CBC 11B-202.3 - EXCEPTION: 2 (***FILL OUT PAGE 3***)***

A. JOB ADDRESS: _____
SUITE NO. _____

B. Property Owner: _____
Address: _____ *City* _____
State: _____ *Zip:* _____ *Phone No.* _____

C. Applicant: _____
Position/Relationship: _____
Address: _____ *City* _____
State _____ *Zip* _____ *Phone No.:* _____

Case No.:
H-2019- _____

Project Information:
P/C. #: _____
Permit # _____
Use: _____
Stories: _____
Verified by: _____
Receipt # _____

Distribution:
❑ *Owner* _____
❑ *Petitioner* _____
❑ *P/C Eng* _____
❑ *Inspector.* _____
❑ *Other* _____

An unreasonable hardship exists where the cost of providing an accessible entrance, path of travel, sanitary facilities, public phones, drinking fountains, etc. exceeds 20% of the cost of the project without these features.

When the total construction cost of alterations, structural repair or additions do not exceed a valuation threshold of $166,157, the actual work of the project must comply with current code and an amount equal to at least 20% of the cost of the project must be spent to improve required accessibility features that are not in compliance with current code.

In choosing which accessible elements to provide, priority should be given to those elements that will provide the greatest access, by providing code compliance in the following order:

1. An accessible primary entrance.
2. An accessible route to the altered area.
3. At least one accessible restroom for each sex.
4. Accessible public telephones (when provided).
5. Accessible drinking fountains (when provided).
6. When possible, additional accessible elements such as additional parking, storage and alarms.

If you want to request an unreasonable hardship, you must complete the attached worksheet, and prepare a site and floor plan of the existing and proposed accessibility improvements. This information must be submitted to the Building Division in duplicate, prior to processing of your permit application. One copy of the approval or denial will be returned to the applicant.

Address: _____ P/C #: _____

1. Total Cost of Construction contemplated *(not including disabled access work)* $ _____

   Identify the accessibility features, which will **NOT** be brought into compliance if the request is granted. Provide an estimate of the cost of compliance for each item.

   - ❑ Path of travel to entrance (ramps, walks) ..... $ _____
   - ❑ Path of travel to altered area(s) ..... $ _____
   - ❑ Sanitary facilities (restrooms) ..... $ _____
   - ❑ Parking ..... $ _____
   - ❑ Drinking fountain(s) ..... $ _____
   - ❑ Accessible phone(s) ..... $ _____
   - ❑ Accessible signage ..... $ _____
   - ❑ Other ..... $ _____

   Total cost of providing compliance:. $ _____

   Identify the accessibility features and equivalent facilities, which **will be provided** or brought into compliance as required by Code. Provide an estimate of the cost of each item.

   a. _____ $ _____
   b. _____ $ _____
   c. _____ $ _____
   d. _____ $ _____
   e. _____ $ _____
   f. _____ $ _____

   Total: $ _____

2. **Technically infeasibility – if applicable complete Page 3 of this application**

3. **Fill out this section if the path of travel from the disabled parking spaces to the tenant space is not accessible.** List projects (tenant improvements, additions, remodels, etc.) performed within previous three years where no disabled access improvement was performed in conjunction with the project. State description, date, and cost.

   _____
   _____
   _____
   _____

The applicant understands that although the City may approve this request of unreasonable hardship and the proposed equivalent access, the City reserves the right to require additional access compliance upon receiving a complaint of inadequate access at this location.

4. _____
   (Applicants Name or Authorized Representative) *(Date)*

5. _____
   (Applicants Signature) *(Date)*

FOR CITY USE ONLY

❑ Approved ❑ Denied By: _____
(Chief Building Official) *(Date)*

*The $166,157 is based on $50,000 in 1981 dollars as of January 1, 2019.

CODE EXCERPT NOTES

Address: _____ P/C #: _____

TECHNICALLY INFEASIBLE. An alteration of a building or a facility that has little likelihood of being accomplished because the existing structural conditions require the removal or alteration of a load-bearing member that is an essential part of the structural frame, or because other existing physical or site constraints prohibit modification or addition of elements, spaces or features which are in full and strict compliance with the minimum requirements for new construction and which are necessary to provide accessibility.

Describe why the nature of accessibility is **technically infeasible**:

Describe how equivalent facilitation will be provided: